SILICON CHIP

MAY 2015
ISSN 1030-2662
05
9 771030 266001
PP255003/01272
$9.95* INC GST NZ$12.90 INC GST

$9.95 06/15E
SILICON CHIP
11 15
NET
Top
2010010670 86 280415 2
Bookmark Newsagency

We visit the 2015 Australian International Air Show

To build: Appliance Earth Leakage Tester

SOLAR POWER: IS IT WORTH IT?

MikroElektronika's incredible "BUGGY"

A mobile micro development platform with hundreds of applications!

Jaycar Electronics
Better, More Technical

KIT OF THE MONTH

$249

12VDC Ultrasonic Antifouling Kit for Boats

SILICON CHIP SEP/OCT '10 KC-5498

Marine growth electronic antifouling systems can cost thousands. This project uses the same ultrasonic waveforms and virtually identical ultrasonic transducers mounted in a sturdy polyurethane housing. The single transducer design of this kit is suitable for boats up to 10m (32ft); boats longer than about 14m will need two transducers and drivers. Suitable for aluminium and fibreglass boats. PCB is 104 x 78mm.

Kit supplied with control electronic kit and case, ultrasonic transducer, potting and gluing components, housings and wiring.

PRE-BUILT ANTIFOULING SYSTEMS ALSO AVAILABLE:

DUAL OUTPUT Suitable for vessels up to 14m (45ft) YS-5600

QUAD OUTPUT Suitable for vessels up to 20m (65ft) YS-5602

$899 YS-5600

$1199 YS-5602

AUTOMOTIVE KITS

$49.95

Car High Energy Ignition Kit

SILICON CHIP NOV/DEC '12 KC-5513

Use this kit to replace a failed ignition module. Suits vehicles with ignition system that use a single coil with points, hall effect/ lumenition, reluctor or optical sensors (Crane and Piranha) and ECU.

Kit supplied with silk-screened PCB, diecast enclosure, pre-programmed PIC and PCB mount components for four trigger/pickup options. Hall-effect and optical pick-ups not included.

- PCB: 98 x 56mm

$27.95

Car Headlight Reminder Kit

SILICON CHIP AUG '01 KC-5317

Features include a modulated alarm, ignition and lights monitoring, optional door switch detection, time-out alarm and a short delay before the alarm sounds. 12VDC.

Kit supplied with solder masked PCB with overlay, case with screen printed lid and all electronic components.

- PCB: 78 x 49 mm

$21.95

Capacitor Discharge Ignition Kit

FOR MOTOR BIKES

SILICON CHIP MAY '08 KC-5466

Many modern motor bikes use a Capacitor Discharge Ignition (CDI) to improve performance and enhance reliability. However, if the CDI ignition module fails, a replacement can be very expensive. This kit will replace many failed factory units and is suitable for engines that provide a positive capacitor voltage and have a separate trigger coil.

Kit supplied with solder masked PCB and overlay, case and components. Some mounting hardware required.

- PCB: 45 x 64mm

AUDIO EFFECTS KITS

$74.95

Theremin Synthesiser Kit MkII

SILICON CHIP MAR '09 KC-5475

The ever-popular Theremin is better than ever. Create your own eerie science fiction sound effects by simply moving your hand near the antenna. Easy to set up and build.

Kit supplied with PCB with overlay, pre-machined case and all specified components.

- Requires 12V power supply (MP-3020)
- PCB: 85 x 145mm

12V POWER SUPPLY MP-3020 **$18.95**

$16.95

Clifford The Cricket Kit

SILICON CHIP DEC '94 KC-5178

Clifford hides in the dark and chirps annoyingly until a light is turned on - just like a real cricket. Clifford has cute little LED insect eyes that flash as it sings.

Kit supplied with PCB, piezo buzzer, LDR plus all electronic components.

- PCB: 40 x 35mm

$4.95

AVAILABLE IN STORE:
OUR ALL NEW
2015
CATALOGUE

$19.95

Crazy Cricket and Freaky Frog Kit

SILICON CHIP JUN '12 KC-5510

Designed to imitate the chirping noise of a cricket or gentle croaking of a frog (alternates at power up). It activates in darkness and stops when disturbed by light.

Kit supplied with PCB, preprogrammed IC, battery and electronic components.

- PCB: 30 x 65mm

HOUSEHOLD KITS

$19.95

The 'Flexitimer' Kit

ELECTRONICS AUSTRALIA MAR '91 KA-1732

Runs on 12-15V DC and switches the on-board relay once or repeatedly when the switching time is reached. Switching time can be set between 7 seconds and 2 hours in fixed steps.

Kit supplied with PCB and electronic components.

- Requires 12- 15VDC (MP-3147)
- PCB: 74 x 47mm

12-15VDC POWER SUPPLY MP-3147 **$17.95**

$24.95

Temperature Switch Kit KG-9140

This kit operates the included relay based on preset temperatures. Ideal as a thermostat, ice alarm, or hydroponics applications, etc. Adjustable temperature range of approx -30 to +150°C.

Kit supplied with PCB, NTC thermocouple and all electronic components.

- Requires 12- 15VDC (MP-3147)
- PCB: 56 x 28mm

12-15VDC POWER SUPPLY MP-3147 **$17.95**

Price changes will take effect for some Jaycar products on 1 May 2015. RRP listed are based on price changes on 1 May 2015.

Contents

Vol.28, No.5; May 2015 www.siliconchip.com.au

Features

12 The Australian International Airshow 2015
The Australian International Air Show and Aerospace and Defence Exposition 2015 was again staged at Avalon, Victoria earlier this year. Here's a look at some of the show's highlights – by Dr David Maddison

20 Review: the Navman MiVue Drive GPS Unit
Many readers have GPS navigation in their cars and some also have a dashcam. But who wants to have two devices stuck to the windscreen? The Navman MiVue Drive GPS unit combines both functions – by Leo Simpson

38 Home Solar Panel Electricity: Is It Worth It?
Generating your own electricity from solar panels on your roof seems like a great idea. But is it? One reader "took the plunge" a few years ago and kept records. Here are his conclusions – by Dr Alan Wilson

86 Review: The MikroElectronika Buggy
MikroElektronika's "Buggy" is a micro workstation unlike any you've seen before. It has four wheels and motors and adding MikroElektronika's click boards means it can do a lot more than just run around – by Ross Tester

Projects To Build

26 Appliance Earth Leakage Tester
Use it to check the safety of earthed and double-insulated equipment that's powered from the 230VAC mains supply – by John Clarke

42 WeatherDuino Pro2 Wireless Weather Station, Pt.3
Last month, we built the Tx unit & temperature/humidity sensor and discussed suitable wind & rain instruments. This time, we're building the receiver (Rx) and getting it to send data to a PC – by A. Caneira & Trevor Robinson

64 Balanced Input Attenuator For Audio Analysers & Scopes
Build it to extend the measurement capabilities of low-cost USB test instruments such as USB DSOs. This unit provides balanced/differential inputs for each channel as well as unbalanced inputs & three attenuation ranges – by Jim Rowe

78 4-Output Universal Voltage Regulator
Low-cost unit has provision for adjustable positive & negative outputs plus two fixed positive outputs of +5V & +3.3V – Jim Rowe & Nicholas Vinen

Special Columns

58 Serviceman's Log
What let the magic smoke out? – by Dave Thompson

88 Circuit Notebook
(1) Arduino-Based IR Remote With LCD Touch-Screen; (2) Firmware Update For 2.5GHz Frequency Counter; (3) A Modern Version Of The Ping-Pong Game

92 Vintage Radio
The Radiola 523-M: the last vibrator-powered radio – by Rodney Champness

Departments

2 Publisher's Letter
4 Mailbag
57 Product Showcase
99 Ask Silicon Chip
103 Market Centre
104 Advertising Index
104 Notes & Errata

Appliance Earth Leakage Tester – Page 26.

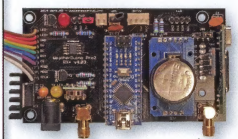

WeatherDuino Pro2 Wireless Weather Station, Pt.3 – Page 42.

Balanced Input Attenuator For Audio Analysers & Digital Scopes – Page 64.

4-Output Universal Voltage Regulator – Page 78.

SILICON CHIP
www.siliconchip.com.au

Publisher & Editor-in-Chief
Leo Simpson, B.Bus., FAICD

Production Manager
Greg Swain, B.Sc. (Hons.)

Technical Editor
John Clarke, B.E.(Elec.)

Technical Staff
Ross Tester
Jim Rowe, B.A., B.Sc
Nicholas Vinen

Photography
Ross Tester

Reader Services
Ann Morris

Advertising Enquiries
Glyn Smith
Phone (02) 9939 3295
Mobile 0431 792 293
glyn@siliconchip.com.au

Regular Contributors
Brendan Akhurst
David Maddison B.App.Sc. (Hons 1), PhD, Grad.Dip.Entr.Innov.
Kevin Poulter
Dave Thompson

SILICON CHIP is published 12 times a year by Silicon Chip Publications Pty Ltd. ACN 003 205 490. ABN 49 003 205 490. All material is copyright ©. No part of this publication may be reproduced without the written consent of the publisher.

Printing: Hannanprint, Warwick Farm, NSW.

Distribution: Network Distribution Company.

Subscription rates: $105.00 per year in Australia. For overseas rates, see our website or the subscriptions page in this issue.

Editorial office:
Unit 1, 234 Harbord Rd,
Brookvale, NSW 2100.
Postal address: PO Box 139,
Collaroy Beach, NSW 2097.
Phone (02) 9939 3295.
Fax (02) 9939 2648.
E-mail: silicon@siliconchip.com.au

ISSN 1030-2662
Recommended and maximum price only.

Publisher's Letter

Solar panel installations could have future costly implications

Solar panel installations continue to proliferate all over Australia and it seems that these could become a liability in the future for owners of the homes and buildings upon which they are installed. These thoughts were prompted by a recent large solar panel installation quite near our own premises in Brookvale.

The first point of concern is that of roof maintenance. Brookvale is quite close to the sea and if one takes a bird's eye view of the industrial precinct there are countless rusty roofs which will ultimately have to be replaced unless the premises themselves are demolished and redeveloped. From my experience with the metal roofs of our own premises and my garage at Collaroy (even closer to the sea), they need to be repainted about every 10 years, otherwise rust and corrosion rapidly take a toll. Not only that but the screw fastenings tend to corrode more rapidly than the roof itself and they often need to be replaced, even if the roof is relatively sound.

But how can that be done if there is a solar panel installation present? These installations are supposed to be there for 25 years or more but if the roof starts to leak, as it ultimately will if regular maintenance has not been done, the solar panels will need to be removed, repairs carried out and the installation restored.

In fact, how do you even inspect a roof for corrosion and possible leaks if a major part of it is covered by solar panels? So who pays for all that work? My bet is that it won't be the company that installed the array or the finance company backing them; they might not even still exist, throwing up the question of who owns the array and who is responsible for repairs. Typically, the larger installations are owned by the business occupying the premises and any grid feed-in is more or less incidental. But ultimately, in all cases it is likely to be the responsibility of the building owner to pay for all repair costs.

Nor is this maintenance problem confined to metal roofs. Tiled roofs also deteriorate, with ridge capping and metal valleys being the first to leak, followed by cracked tiles due to wind movement and bird damage. Bird damage? Yes, crows like to pick up white stones and carry them aloft and then drop them (thinking they are eggs). The most common result is damaged cars and broken tiles. Finding a leak in a tiled roof can be nightmare, especially if it has insulation installed.

A second point of concern is the risk of electrocution to fire-fighters from solar panel installations. An acquaintance of mine, when he heard about fire-fighters' concerns, ridiculed them because "solar panels only put out about 12V don't they?". When I pointed out that a typical installation produced well over 300V DC and that 300V DC is far more dangerous than 300VAC, he was dumbfounded. In fact, fire-fighters have experienced severe shocks – just because the panel isolators may be open, they are still able to generate high and dangerous voltages.

Those voltages are also recognised to be extremely hazardous to anyone climbing on to their roof to escape rising floodwater. And what about anyone who might want to wash dirt off their panels or to clear out accumulated leaf debris – important if you live in a bushfire prone area? So why aren't there warning signs on every roof which has solar panels?

Finally, one also has to consider the life of the inverter and the solar panels themselves. Solar panels slowly become less efficient as time passes and inverters do fail – we have already featured service stories about inverters that were no longer repairable and with parts that were difficult to source. How much worse will these problems be in the future?

To summarise, solar panels are not without drawbacks. So if you are considering a solar roof installation, take off the rose-tinted glasses and think about those disadvantages.

Leo Simpson, Publisher

Free Your Creativity

with Core Independent Peripherals

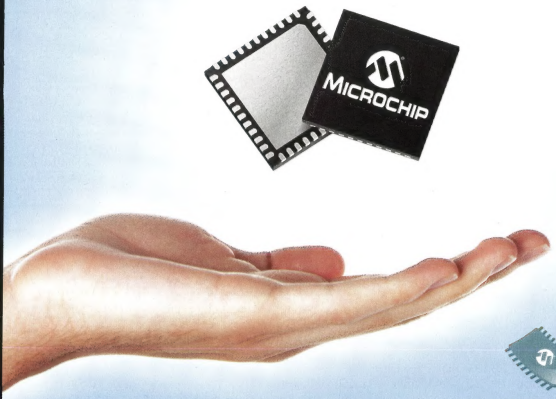

FLEXIBLE INTELLIGENCE MADE EASY

8-BIT PIC® MICROCONTROLLERS

PIC® microcontrollers with Core Independent Peripherals take 8-bit MCU performance to a new level. With a number of on-board modules designed to increase capability in any control system, these MCUs represent the best value in embedded design.

Core Independent Peripherals are designed to handle their tasks with no code or intervention from the CPU to maintain operation. As a result, they both simplify the implementation and boost the performance of complex control systems while giving designers the flexibility to innovate.

Flexible Functional Building Blocks

- Power conversion
- Motor drive
- Signal generation
- Sensor interface

microchip DIRECT
www.microchipdirect.com

Microchip Technology Australia
Tel: 61-2-9868 6733 E-mail: aust_nz.inquiry@microchip.com

MICROCHIP

www.microchip.com/cip

The Microchip name and logo, the Microchip logo and PIC are registered trademarks of Microchip Technology Incorporated in the U.S.A. and other countries. All other trademarks are the property of their registered owners. © 2015 Microchip Technology Inc. All rights reserved.

MAILBAG

Letters and emails should contain complete name, address and daytime phone number. Letters to the Editor are submitted on the condition that Silicon Chip Publications Pty Ltd may edit and has the right to reproduce in electronic form and communicate these letters. This also applies to submissions to "Ask SILICON CHIP" and "Circuit Notebook".

The importance of heat energy balance

I wish to make the following comments after reading Mr Dinn's letter and the Publisher's Letter in the April 2015 issue.

First, I understand Mr Dinn's problem with temperature measurements as such on a global scale. The temperature at a single location is easily obtained and can only be correlated with temperatures from other locations with difficulty.

In fact, Mr Dinn misses the observation that measurements from meteorological stations are showing a steady rise in recorded temperatures over the past 100 years or so in Australia and similar rises worldwide. Naturally the temperatures recorded at different stations will be locality-dependent but the important trend is the temperature rise.

As an engineer, Mr Dinn would understand the importance of the Earth's heat energy balance. A check of the internet will find overall the Earth's heat energy state is not in equilibrium but the heat loss is around half a watt per square metre less than the heat energy input (solar) averaged over the whole Earth (via satellite measurements).

For thousands of years the Earth's heat energy balance has been in a state of equilibrium with global temperatures remaining relatively constant with an atmospheric carbon dioxide concentration of 280 parts per million.

Human activity over the past 200 to 250 years (deforestation and burning of fossil fuels) has raised the atmospheric carbon dioxide concentration to more than 400 parts per million, thus reducing the Earth's rate of heat energy loss.

Basic physics indicates the only way the Earth's heat energy loss can be increased to match the solar heat energy input is by an increase in global temperature (Global Warming).

And now to the Publisher's Letter and his question, "Why are we worried about climate change?" Global warming due to the Earth's heat energy accumulation will result in climate changes worldwide. Some nations may be able to reduce the public experience of temperature rises etc by the increased use of air-conditioning systems but less developed nations will not have this advantage. Incidentally, all systems that "improve" our lifestyle demand energy. Reliance on present energy sources will only increase carbon dioxide release and add to global warming.

Rather than rely on technological developments that may occur in the next 50 years we should begin using already proven sources of renewable energy sources (solar, wind, tidal, biological, hydro etc) and reduce reliance on fossil fuels. We should also be applying presently understood energy efficiency principles in building design and operation.

Col Hodgson,
Mount Elliott, NSW.

Comment: while no-one would argue that carbon dioxide has not increased to over 400 parts per million, it is arguable whether that is all due to human activity. Nor can we necessarily

Off-grid operation is not difficult

The Publisher's Letter in the March 2015 issue was about people going off-grid. I have managed to do so with just 1kW of solar panels using a 12V system and five 100Ah batteries making a 500Ah bank to drive a 2kW pure sinewave inverter. I have managed to do it all for under $2000.

I also built a 50A charger and made a DC hot-water system so I saved quite a bit on these items. By experimentation, I found that the DC hot water system could heat water using only 50W of power in a couple of hours. I made it switchable from 50W up to 200W for a quick heat.

It's also switchable for solar output only or battery, if night heating is required. It is a very efficient hot-water system and will keep the water hot in cold weather for more than 24 hours. I also run a 12V fridge/freezer that only draws 3.8A which is cycled off much longer than on, even in hot weather

I run a 700W microwave for cooking and boiling water for beverages. I also can run a 1400W convection oven and a 1600W air-conditioner. This might sound a bit much but these items don't run for very long when they are used, eg, boiling water for two minutes or cooking meals from 30 minutes to an hour. With the air-conditioner, I am out all day so it only goes on when I come home if it's a very hot day and in about 10 minutes to 20 minutes it has cooled the place down. These items also go into cycle mode when they reach temperature, so the wattage comes down again.

With lighting, each light is equivalent to 40W but being LEDs they draw less than 5W each and the TV is only 40W, being a full LED model. Normally, I use no more than 20% of the battery Ah available. Occasionally it might get to 50% in really hot weather when the air-conditioner is on for longer times but this is only several days a year here in Adelaide. Most times, a fan is quite effective and only draws 10W on low and 40W on high.

I figure that by using the batteries this way, they should last me 10-20 years. If I was to use lithium batteries I could use less capacity as you can discharge them to 80% depth without harm and they are lighter, smaller and have a 10-year life.

David Francis,
Kilburn, SA.

Comment: we have an article on this topic elsewhere in this issue.

Vintage radios were often leading edge designs

I enjoyed reading the article on the AWA 897P in Vintage Radio the April 2015 issue. Like many collectors, I particularly appreciate articles about "bleeding edge" designs, when nobody was entirely sure how to go about using new technologies. This was particularly the case with early 1930s radio designs and was somewhat repeated in the late 1950s with the first transistor designs.

My brother had an AWA 897 of some sort, which he bought in the early 1970s in a secondhand shop. He was in the airforce at the time and reported it was quite an impressive performer when they were doing training out in the bush, particularly with an external antenna connected. The double-tuned IFs are quite rare in transistor designs, which points up its valve radio ancestry but also explains its rather narrow audio bandwidth and superior DX performance. I must admit to being completely stumped at the time as to the purpose of the dual-gang volume control and extra audio transformer; I'm glad that's been cleared up! I had thought that it was some sort of "loudness control".

In the late 1980s, he gave it to me as it had stopped working. The problem turned out to be an open-circuit detector diode. I fitted it with a mains transformer and it spent another 10 years or so in my other brother's printing shop but I never found out what happened to it after that.

Keith Walters,
Riverstone, NSW.

conclude that it will lead to global warming or that global warming will be bad for humanity overall. Global cooling could be much worse.

Circuit changes can be worthwhile in vintage radios

John Hunter's Mailbag contribution in the March 2015 issue is well worth reading by all who deal with vintage radio and electrical conventions from many years ago. On page 13 near the top of the first paragraph, John talks of the connection of the tone control or plate bypass capacitor from the plate of the output valve to earth. I agree that the capacitor should be connected across the speaker transformer.

In the average domestic superhet receiver, the intermediate frequency (IF) signal is detected by a diode detector. Following the detector there is a combination of audio signal and the IF signal fed into the audio amplifier. Whilst there is some filtering, although rarely enough, to remove the IF signal, it is often quite significant and at the plate of the audio output valve it may be sufficient to cause instability due to feedback into the start of the IF amplifier.

The plate bypass capacitor to chassis reduces this signal but if it is connected across the speaker transformer the effectiveness of the filtering may not be as good, particularly if the main high-tension line only has old electrolytic capacitors between HT and the chassis. The older electrolytics often had poor ability to bypass IF/RF signals to chassis.

To cut costs, paper capacitors were often not put between HT and chassis and the electrolytic capacitors were relied on to bypass IF/RF signals. What ability the earlier capacitors had to do the job deteriorated as they aged. By placing the bypass capacitor across the speaker transformer and then another paper capacitor physically near it from HT to chassis, the operation of the receivers would be more reliable, with less likelihood of damage to the speaker transformer. I often alter sets I work on so that the capacitor is placed across the speaker transformer.

On another topic, your articles on IP security cameras in the March 2015 issue were most helpful. Just one thing I'd like to say, from what I've been told about some of the ne'er-do-wells' methods, is that they use spray paint to cover the cameras' vision, so the cameras need to be fairly high up to avoid this or be inconspicuous. These sods are becoming more devious as time goes by.

Rodney Champness,
Mooroopna, Vic.

Preserving originality is important

I would like to comment on your Vintage Radio article in the March issue concerning the Tela-Verta radio and also make a few suggestions if I may. In general, I found this to be a very disappointing article, well below your usual standard.

I have several points of contention. First, the author deemed the clock mechanism to be beyond repair. Fair enough. But the approach he took in removing it com-

Mailbag: continued

Why are hearing aids so expensive?

Having read your articles on Blamey and Saunders and read the comments from other readers I would like to share my experience.

I went for a hearing test and both my ears are well down above 3kHz. On discussion with my audiologist, I asked why he thought hearing aids were so expensive. He gave many technical reasons and certainly did not list one you suggested recently "that of providing the service". I explained that from my point of view they are basically digital amplifiers and in today's world most features are all in the programming. He did not agree.

I agreed to trial a set that would cost me $1300 after my government rebate, then I get another $500 off through my medical fund. He got them out of the box and hooked them up to his computer to program them for me. He also explained that out of the box they are 10-channel units that would cost me $2900 so he was going to program them back to six channels to cost $1300 which is what I wanted. I had to bite my lip!

I tried the aids and they were a success. I could hear everyone around a table of 10 in a noisy restaurant with background music playing; something I most certainly could not do previously. I did my homework and compared other suppliers. I have now purchased the 10-channel $2900 unit from another supplier at a cost to me of $0 after my government and medical fund rebate.

I also purchased a Bluetooth remote control which is great for hearing my phone in both ears, coupled with a WiFi TV unit which again allows me hear TV directly in both ears.

Geoff Hansen,
Little Hampton, SA.

pletely and replacing it with a cheap quartz movement, in my opinion, is undesirable. Not only has he completely destroyed the set's integrity but there are now two empty holes on the front of the cabinet that serve no purpose. Had this been my set, I would have cleaned everything, replaced the hands and knobs and left it all in place as a non-working clock.

It was with total disbelief that I read about how the chassis was cleaned. Was water used? Surely not! Anyway, yet another part of the set was destroyed.

My suggestion to anyone cleaning a chassis is this: automotive wax and grease remover, toothbrush, rags and plenty of patience and care. If you can't be bothered doing it properly, then leave it alone. A chassis that has been half-heartedly cleaned looks worse than one that hasn't been cleaned at all.

With regards to corrosion, Bunnings sell a product called "Penetrol" which is available in a spray can and comes with one of those thin tubular nozzles so you can get it anywhere inside a chassis. It will kill the rust stone dead and leave it with a glossy appearance. NEVER use sandpaper on a radio chassis. Once you do this you are committed to a respray and no matter how good you are, you will never recreate the original factory finish. A bit of surface rust isn't going to detract from the set's originality or value.

I found it strange that the author applied power to the set before replacing all the critical capacitors. AGC bypass, HT bypass and the all-important output valve grid-coupling capacitor should all be replaced before switch-on. In fact, I don't even bother testing any of these. As they are all critical to the set's operation, I replace them as a matter of course. The chances of them being serviceable are fairly remote.

How you replace them will depend largely on the set you are working on. If it's a run-of-the-mill set like this, then I will simply solder in new replacements. On a more valuable set, eg, a mottled ivory Empire State, then I will go to the trouble of concealing the new capacitors inside the old ones. Apart from the reworked solder joints you will be hard pressed to see they have been replaced.

I should point out that this is a personal preference and not a practice that all collectors subscribe to. I just like to keep the radio in as original condition as possible. With regards to the electrolytics, I generally like to see if they can be reformed before replacing them. Obviously, if they are deformed or leaking, then they must be replaced. But if they look OK, then why not try reforming them first? This procedure has been detailed in a previous Vintage Radio article.

I would like to suggest that as aside to a future Vintage Radio column, you publish a set of guidelines as to the approach that should be taken when undertaking the restoration of mains powered sets.

Lastly, I apologise for the highly critical nature of this letter but it really does annoy me when I see a valuable piece of Australian Radio History treated in this way.

Please keep the vintage radio articles coming.

R. B.,
via email.

Comment: a number of readers have written to criticise this article in quite severe terms that are far out of proportion to the "sins" and as you will realise, some of your criticisms have been also edited out. Not everyone who takes on a Vintage Radio restoration project wants a "Concours d'Elegance" or "museum quality" result. Nor does everyone have the ability to, say, fix the stripped gears in an electric clock motor and even if they do, they may not want to do all the work.

Is it not far better to have get a radio going again in a form in which it can be enjoyed? And if that involves replacing an old synchronous clock with a readily available battery movement, then why not? After all, is not Vintage Radio principally about enjoyment of old electronic technology rather than striving for perfection?

Is the replacement of a non-working clock really much different from those restorers who decide to modify the circuit so that it is more reliable and performs better, as described in the letter above? And would you leave a knotted 2-core mains cord on a set rather than use a properly anchored 3-core flex with the chassis earthed? That is certainly not "original".

Finally, readers do like to read the

"Rigol Offer Australia's Best Value Test Instruments"

Oscilloscopes

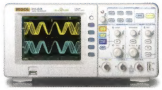

RIGOL DS-1000E Series

- 50MHz & 100MHz, 2 Ch
- 1GS/s Real Time Sampling
- USB Device, USB Host & PictBridge

FROM $439 ex GST

NEW RIGOL DS-1000Z Series

- 50MHz, 70MHz & 100MHz, 4 Ch
- 1GS/s Real Time Sampling
- 12Mpts Standard Memory Depth

FROM $539 ex GST

RIGOL DS-2000A Series

- 70MHz, 100MHz & 200MHz, 2 Ch
- 2GS/s Real Time Sampling
- 14Mpts Standard Memory Depth

FROM $1,164 ex GST

Function/Arbitrary Function Generators

RIGOL DG-1022

- 20MHz Maximum Output Frequency
- 2 Output Channels
- USB Device & USB Host

ONLY $499 ex GST

NEW RIGOL DG-1000Z Series

- 30MHz & 60MHz
- 2 Output Channels
- 160 In-Built Waveforms

FROM $905 ex GST

RIGOL DG-4000 Series

- 60MHz, 100MHz & 160MHz
- 2 Output Channels
- Large 7 inch Display

FROM $1,225 ex GST

Spectrum Analysers

RIGOL DSA-800 Series

- 9kHz to 1.5GHz, 3.2GHz & 7.5GHz
- RBW settable down to 10 Hz
- Optional Tracking Generator

FROM $1,790 ex GST

Power Supply

RIGOL DP-832

- Triple Output 30V/3A & 5V/3A
- Large 3.5 inch TFT Display
- USB Device, USB Host, LAN & RS232

ONLY $599 ex GST

Multimeter

RIGOL DM-3058E

- 5 1/2 Digit
- 9 Functions
- USB & RS232

ONLY $629 ex GST

Buy on-line at www.emona.com.au/rigol

Sydney
Tel 02 9519 3933
Fax 02 9550 1378

Melbourne
Tel 03 9889 0427
Fax 03 9889 0715

Brisbane
Tel 07 3275 2183
Fax 07 3275 2196

Adelaide
Tel 08 8363 5733
Fax 08 83635799

Perth
Tel 08 9361 4200
Fax 08 9361 4300

EMONA

email testinst@emona.com.au

web www.emona.com.au

OCEAN CONTROLS

Helping to put you in Control

Current Transducer
DIN rail mount current transducer presents a 0 to 5 VDC signal representing the DC current flowing through a primary conductor. 0 to 30 A primary DC current range. 24 VDC powered.
SKU: WES-051
Price: $72.95 ea + GST

DC-DC Converter
Compact size step-down break out board that takes an input voltage between 4.5 to 42 VAC/DC and efficiently reduces it to a lower, user-adjustable voltage via on-board SMD potentiometer. It has an adjustable output voltage range of 4 to 25 VDC and a maximum output current of 600 mA. DIN rail option is also available.
SKU: KTA-300
Price: $44.95 ea + GST

Roboclaw
RoboClaw is an efficient, versatile, dual-channel synchronous regenerative motor controller. It features 4-control options; USB serial, TTL serial, RC pulse & analog. It can supply up to 30 A or 60 A continuous per channel, at voltages from 6 to 34 VDC.
SKU: POL- 2393
Price: $195.95 + GST

SMS Controller & Router
Multimax MA-2040 is a rugged 3G router suitable for a diverse range of industrial M2M applications including SMS alarming and control. It features: 2 x digital I/O, status LEDs, SMA antenna and 2 x configurable Ethernet ports. Supports Modbus RTU/TCP protocol.
SKU: MAC-001
Price:$649 +GST

IP66 Optidrive
Single phase input, single phase output AC motor drive. Suits single phase AC Motors up to 1.1 kW. It features Modbus RTU & BacNet MS/TP communications for setup, data logging & control.
SKU: IVD-012
Price: $799 ea + GST

Magnetic Compass
The DCM230B is a compact size, 2D electronic compass, measuring heading 0° to 360°. It outputs serial data via the RS-232 interface. 5 VDC powered with 40 mA max current cosumption.
SKU: SRS-201
Price: $229 ea + GST

Dome Type LED Warning Light
The Q125LP is a classic roating warning lamp that is enclosed in an IP65 rated dome type. It adopts a high-brightness LED & is suitable for machines having lots of vibration. Selectable steady or flashing function. 12 to 24 VDC powered.
SKU: QLL-0101
Price: $139.95 ea + GST

For OEM/Wholesale prices
Contact Ocean Controls
Ph: (03) 9782 5882
oceancontrols.com.au

Prices are subjected to change without notice.

Mailbag: continued

Using 100V line transformers as valve output transformers

Since publication of the Currawong amplifier in the October 2014 and following issues of SILICON CHIP, there has been renewed interest in valve amplifiers. 100V line transformers are designed for PA amplifiers which do not have valve output stages but relatively low impedance transistor output stages. While the Altronics M1115 100V line transformer was successfully used in the Currawong, not all 100V line transformers are suitable for valve work.

Table 1 lists commonly available 100V line transformers from Altronics. Columns one, two and three show primary tapping, primary impedances, and turns ratios for 8Ω secondary load. The remaining five columns show the various transformers available (15W, 30W, 40W, 60W and 20W, with an asterisk marking the primary tapping available for a particular transformer).

L_P is primary inductance and L_K is leakage inductance referred to primary, both measured with a Peak Atlas LCR meter. None of the transformers are suitable for single-ended operation as the DC component would cause transformer saturation and large distortion. If we check the asterisk against the turns ratios column, only M1115, M1130, and M1120 can have a centre-tap for use as a push-pull output transformer.

For example, you can connect the 20W tapping of M1130 to B+ and 5W and common to anodes. Both M1115 and M1120 have extra symmetrical tappings which allows ultra-linear connections (2.5W and 15W taps to screen grids). But this is not the end of the story. The frequency response of the output transformer depends on the primary inductance at the low-frequency end, while the high-frequency roll-off depends on the leakage inductance (this simplified version ignores the effect of winding capacitances).

The -3dB point at low frequencies occurs at $R_A/(2\pi L_P)$, where R_A is the parallel impedance of primary impedance and anode resistance (adapted from Radiotron Designer's Handbook fourth edition).

At the high frequency end, the -3dB point occurs at $R_B/(2\pi L_K)$, where R_B is the series impedance of primary impedance and anode resistance. For pentode connection, the anode resistance of a 6L6 valve is approximately 35kΩ and it will drop to 1.7kΩ when connected in triode mode.

For ultra-linear connection, this will be somewhere in-between. Assuming the anode resistance is about 3.5kΩ (7kΩ anode-to-anode), the low frequency -3dB point will be 72Hz and at the high frequency end, it will be 108kHz. In practice, this will be lower due to winding capacitances. To obtain a reasonable low-frequency response, we would require larger primary inductance.

The most suitable transformer to use is M1115 followed by M1120, if ultra-linear connection is required. In practice, the frequency response is somewhat better due to negative feedback. The M1115 is also suitable for class-A triode push-pull connections.

At right is the frequency response

Vintage Radio articles and often ask us to keep them coming. But we would have great difficulty publishing any Vintage Radio articles if all potential authors knew that they could be subjected to the most searching and damning criticisms over sometimes quite trivial aspects.

Similar things occur in other hobbies. For example, in model railways, people who insist on model exactitude are often referred to as "rivet counters". They take the joy out of the hobby.

Comments on SILICON CHIP

I have a problem with the pages that contain multiple columns with an insertion of other items that are in boxes. When you follow a topic that traverses multiple columns or even pages, it is quite possible to miss some of the "boxed" stories that are interleaved.

Table 1: 100V Line Transformers

P (W)	Z (Ohms)	N (s = 8Ω)	M1115	M1126A	M1130	M1136	M1120
60	166.67	4.56				*	
40	250.00	5.59			*		
30	333.33	6.45		*		*	
20	500.00	7.91		*	*	*	*
15	666.67	9.13	*				*
10	1000.00	11.18	*	*	*	*	*
4	2000.00	15.81	*	*	*		*
2.5	4000.00	22.36	*				*
1.25	8000.00	31.62	*				*
L_P			8.18H	1.74H	1.98H	0.826H	4.48H
L_K			22mH	17mH	11mH	3mH	44mH

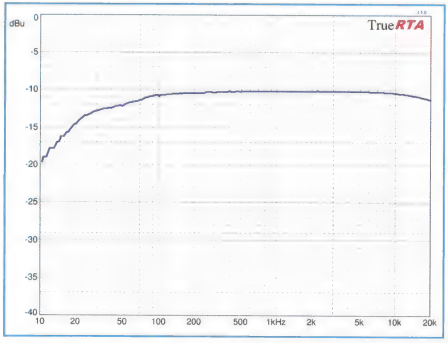

of my test amplifier for an M1115 transformer with 6CG7 plus 12BH7A class-A triode push-pull connection with -3dB global negative feedback. The frequency response is essentially that of the transformer and could be further improved by more negative feedback.

Alex Sum,
Eastwood, NSW.

It would be much easier to follow if all articles were sequential within the columns with no interruptions to the column flow.

While it was some time ago, in your May 2012 edition, the "Ask Silicon Chip" answer to the "Confusion About Power Factor" is not quite right. True, customers are not charged directly for the power factor but the power factor is a component of their bill in that the meter logs the real (as compared to the reactive) power usage by taking the product of the voltage, the current, and the cosine of the angle between the voltage and the current (also known as the power factor), as per M.E.'s quoting of Energex.

It is possible to alter the reactive part of your current by replacing (or altering) the reactive devices (inductors and capacitors (or electronic equivalents) where the circuit operation permits. This will alter the power factor

Five Instruments.
One Device.
Radically Practical.

VirtualBench is an all-in-one instrument that combines essential benchtop equipment into one device and works with PCs or iPads. Convenient and compact, VirtualBench opens up new possibilities for how engineers interact with benchtop instruments.

See how at ni.com/virtualbench
or free call 1800 300 800.

NATIONAL INSTRUMENTS

©2015 National Instruments. All rights reserved. National Instruments, NI, ni.com, and VirtualBench are trademarks of National Instruments. Other product and company names listed are trademarks or trade names of their respective companies. 21177

Silvertone

SIGNAL HOUND

USB-based spectrum analyzers and RF recorders.

SA44B:

- Up to 4.4GHz
- AM/FM/SSB/CW demod
- USB 2.0 interface

SA12B:

- Up to 12.4GHz plus all the advanced features of the SA44B
- AM/FM/SSB/CW demod
- USB 2.0 interface

BB60C:

- Up to 6GHZ
- Facility for GPS time-stamp of recorded RF streams
- Simultaneously monitor two stations or stream the entire FM radio band to disc.
- USB 3.0 Interface

Vendor and Third-Party Software Available.

Ideal tool for lab and test bench use, engineering students, ham radio enthusiasts and hobbyists.

Tracking generators also available.

Virtins Technology USB based DSO's and Signal Generators.

Bitscope Digital and Analog USB test and measurement.

Silvertone Electronics
1/8 Fitzhardinge St
Wagga Wagga NSW 2650
Ph: (02) 6931 8252
contact@silvertone.com.au

Mailbag: continued

Philco radio used surface barrier transistors

Following Ian Batty's Vintage Radio article in the February 2015 edition issue, I was inspired to send you some photos of my Philco T9-126 which uses nine of the same surface barrier transistors. My hobby is vintage radio and I have accumulated dozens of sets over my 70 years.

This set was given to me by a late retired owner/manager of a major Dunedin department store who spent his later years living here in Wanaka. Unfortunately, it arrived with old flat and leaky batteries installed and it took some time to clean the holders and get it working. I have replaced all the original electrolytic capacitors as they were well out of "spec" and also leaky.

We no longer have any AM stations here but there are about 15 FM stations at the last count so this set now gets little use. I can receive National Radio from Alexandra (about 70km as the crow flies) quite well if I get some distance from the house to avoid noise from switch-mode supplies and such.

The shortwave bands used to have a lot of stations but these days very little can be heard in the daytime; night time is better but nothing like it used to be. The telescopic antenna on this set is the longest I have ever seen, at 1.6 metres high.

The very good book that came with the set was published in 1957

and my set by coincidence has a build date of 4th March 1958 which makes it 57 years old. You can see it working on YouTube at https://www.youtube.com/user/Barnee4321

Bruce Barnett,
Wanaka, New Zealand.

Comment: people who want to listen to AM on vintage radios where there are no longer AM transmissions could consider building the "Little Jim" AM transmitter featured in the January 2006 issue. A free 2-page preview is available at www.siliconchip.com.au/Issue/2006/January/"Little+Jim"+AM+Radio+Transmitter

as well but the product of the two will remain the same, giving the same overall power consumption. The only way you may be able to win a little is if the devices changed to give the altered reactive part were lossy devices (ie got warm) and they are replaced by more efficient devices (eg, electronic ballasts for fluorescent lamps).

It is refreshing to see the plain speaking on matters technical and the environment in many of the Publisher's Letters. Rarely do you see such common sense presented in the media. Do you know if any politicians read SILICON CHIP or if they are even aware of your editorials? It would be good if you could give readers permission to copy the Publisher's Letters to their local politicians.

Graham Goeby,
Macleod, Vic.

Comment: our readers certainly have permission to draw the attention of politicians and the general media to Publisher's Letters or particular articles, as long as they are attributed to SILICON CHIP magazine.

Setting up an IP camera

I have been working my way through the March 2015 issue of SILICON CHIP. There is an error in the ar-

ticle on page 22 entitled, "Setting up an IP Camera for WiFi & Internet Access". On page 23 in the LHS column there is a paragraph that reads "Typically, an IP camera will have a default port of 80 or 81. Note that each camera *must* have a unique port number . . ." and . . . "If you are setting up two or more cameras be sure to change the port number to avoid conflicts".

This does not make sense. Each host on a network, which would include an IP camera, can have up to 2^{16} ports [0-65,535] for both TCP and UDP.

So long as no single host tries to run multiple "services" on the same port number there will be no problem as it is the combination of IP and PORT NUMBER that must be unique, ie, X.X.X.X:YY.

The analogy I like is a postal address and the name of the person to whom the mail is addressed. Many people can reside at an address so for the mail to be delivered to the correct person, a name is important. Conversely, a Mr Smith could live at number 8 and number 10. The street address ensures that the correct letter arrives in the hands of the correct person. So if there are five IP cameras on a network and they all use port 80, there is no issue.

When it comes to accessing the cameras from the outside world though, each camera will require its own port forwarding rule to map that camera uniquely. There is no need that the SOURCE and DEST IPs use the same Port Number.

So if I have five IP cameras each using TCP PORT 80 [HTTP] then:

WAN_IP:80 -> 192.168.1.11:80
WAN_IP:81 -> 192.168.1.12:80
WAN_IP:82 -> 192.168.1.13:80

and so on.

Of course exposing port 80 to the outside world can be a very bad idea. There are many tales of woe of people and organisations who have exposed their CCTV systems to the internet using weak or the default passwords.

On the section about determining the camera's IP, the following command works in Windows:

for /L %i in (1,1,254) do ping 192.168.0.%i -n 1 -w 10

The above would ping each valid host IP address on the network. The **-n 1** and **-w 10** simply speed the process up and are not essential. There are 253 valid host IP addresses if the subnet mask is 255.255.255.0 which is most common. After running the above command you then run **arp -a** which will dump the ARP table:

C:\Users\XXX>*arp -a*

Interface: 192.168.0.120 --- 0x11

Internet Address	Physical Address	Type
192.168.0.1	e0-91-f5-58-e2-4b	dynamic
192.168.0.102	cc-08-e0-de-e7-69	dynamic
192.168.0.103	8c-2d-aa-43-0b-e5	dynamic
192.168.0.105	d8-30-62-34-e9-6d	dynamic
192.168.0.107	00-15-65-79-c3-87	dynamic
192.168.0.111	f0-27-65-2c-90-13	dynamic
192.168.0.113	68-a8-6d-63-79-54	dynamic
192.168.0.114	00-a0-de-86-ca-dd	dynamic
192.168.0.117	5c-96-9d-bf-a2-8e	dynamic
192.168.0.118	5c-59-48-c3-c3-20	dynamic
192.168.0.255	ff-ff-ff-ff-ff-ff	static
224.0.0.22	01-00-5e-00-00-16	static
224.0.0.251	01-00-5e-00-00-fb	static
224.0.0.252	01-00-5e-00-00-fc	static
239.255.250.250	01-00-5e-7f-fa-fa	static
239.255.255.250	01-00-5e-7f-ff-fa	static
255.255.255.255	ff-ff-ff-ff-ff-ff	static

All of the "visible" hosts' IP addresses 192.168.0.XXX together with their MAC addresses will be visible. This can eliminate some guesswork on a larger network.

The MAC address can be compared to what is printed on the camera. It is even easier on a Mac or Linux host as it is possible to ping the broadcast address, ie, ping every single host simultaneously using

ping 192.168.0.255

and then wait for the replies and check the ARP table.

Walter Hill,
Mount Pleasant, WA. SC

Question on IP camera article

Could you please put me out of my misery and tell me whether Fig.10 on page 27 indeed has "Motion Detect Sensibility" as the label for one of the drop-down boxes? Or was this an early April Fools joke?

Dave Horsfall,
North Gosford, NSW.

Comment: it is not an April Fool's joke. That's just how the screen is and is part of the software supplied with the camera. Of course, it should be "sensitivity", not "sensibility".

The most versatile Educational Robotic System in the world!

Edison

fun robotics for tomorrow's inventors!

You're a controller
Scan barcodes to make Edison perform new tricks!

You're a programmer
Program with an icon-based drag & drop interface!

You're a builder
Make your LEGO® come alive!

Features include:

- Affordable
- LEGO® Compatible
- Programmable
- Versatile
- Range of free downable resources
- Educational & Fun!

For more info and heaps of free resources, meet Edison at wiltronics.com.au

WILTRONICS

Ph: (03) 5334 2513 | Email: sales@wiltronics.com.au

All brand names & logos remain the property of their registered owners. LEGO and the LEGO logo are registered trademarks of the LEGO Group.

The Australian International Airshow 2015

The 12th Australian International Air Show and Aerospace and Defence Exposition 2015 was again staged at Avalon, Victoria earlier this year. The largest event of its kind in the Southern Hemisphere, it bought together aviation, aerospace and defence professionals, scientific researchers, aviation enthusiasts and members of the public.

There were two concurrent events at Avalon – one was the Australian International Aerospace and Defence Exposition, a major international trade event for aviation, aerospace and defence interests attracting around 600 exhibitors and the other was the Australian International Airshow which comprised numerous static and flying displays.

Business deals worth $1.25 billion were made at the show which included areas of civil aviation, defence and aerospace.

The official attendance figures were 169,251 for the public days and 33,406 for the trade days.

The event came to Victoria in 1992 at the invitation of the then Victorian Premier Jeff Kennett but was actually started in 1976 at the Schofields Aerodrome in Sydney's northwest, which was closed in 1994.

The trade days, which were the "Aerospace and Defence Exposition" component were not open to the public and were from the 24th of February until 2pm on the 27th February. The public event was staged from 2pm on 27th February to 1st March.

Air shows are always interesting and fun and with a huge amount of variety. It is, however, not possible to cover every aspect in detail. The 2013 Airshow was also covered by Silicon Chip in the May 2013 issue. As many of the aircraft and technologies present at the 2013 Airshow were also present at this year's, those will not be covered again in detail. In this article those aircraft and technologies that are novel or new for this year will be the main ones that are covered.

The RAAF (Royal Australian Air Force) of course had a major presence as would be expected and again proved they are not behind in any technologies (and neither are our other military arms).

KC-30A Multi Role Tanker Transport

The RAAF has five KC-30A Multi Role Tanker Transports. These are based on a modified Airbus A330-200 commercial airliner and their purpose is to provide strategic lift and also air-to-air refuelling. Both roles can be fulfilled simultaneously.

In the air-to-air refuelling role it can supply up to 100 tonnes of fuel to either Australian or coalition aircraft, leaving 11 tonnes for itself. This fuel is contained in the standard fuel tanks; no additional tanks are fitted. In its cargo role it can carry 34,000kg in standard underfloor cargo areas.

An example of a mission is a KC-30A remaining 1,800km from its home base with 50 tonnes of fuel available to offload for up to four hours. Other examples of typical missions are the tanker escorting and refuelling fighters to our various engagements in the Middle East.

In the RAAF the KC-30A is capable of refuelling our F/A-18A/B Hornets, F/A-18F Super Hornets, and when fully tested it will refuel the F-35A Lightning II, E-7A Wedgetail, C-17A Globemaster III and other KC-30As. It will also be able to refuel the P-8A Poseidon surveillance aircraft when Australia acquires those.

by Dr David Maddison

PLEASE NOTE: In response to *many* earlier queries, the URLS of http://youtu.be/... in this feature ARE CORRECT! If you remove the dot (full point) between "youtu" and "be" they will not load!

An RAAF KC-30A airborne refuelling tanker, with three F/A-18F Super Hornets following. Note the deployment of the two "hose and drogue" refuelling stations. Inset at left is the Air Refuelling Operator station with 2D and 3D video screens to observe and control refuelling operations.

The KC-30A is equipped with a "hose and drogue" (also known as "probe and drogue") refuelling pod on each wing for refuelling of probe-equipped aircraft and an Air Refuelling Boom System at the tail of the aircraft which can be "flown" into the refuelling receptacle on the receiving aircraft. The refuelling system is controlled by an Air Refuelling Operator who sits in the rear of the cockpit (facing rearward) and views refuelling operations through 2D and 3D video screens.

Interestingly, this two-engine aircraft has the same wing structure as the four engine A340-200/-300 and so it already has a provision for fuel piping and a reinforced structure to which the refuelling pods could be attached, minimising the modifications that had to be made.

Two aircraft can be simultaneously attached to the hose and drogue refuelling stations or one to the boom. Aircraft are designed to use one refuelling system or the other. The hose and drogue system has the advantage that it is easy to retrofit, there can be multiple refuelling points and it doesn't need to be "flown" into the receiving aircraft by an operator and the boom system has the advantage that it has much faster fuel delivery.

The hose and drogue system is favoured by the US Navy while the boom system is favoured by the US Air Force. Most aircraft in the RAAF equipped for refuelling use the boom system with the exception of the Hornets (which were designed for the US Navy). With both systems the aircraft can refuel any suitably equipped Australian aircraft or aircraft of our allies. The capability for both systems has made Australia very popular among our allies with whom we are currently engaged in various military missions around the world.

There is better seat spacing on the KC-30A than on typical equivalent civilian aircraft. It will carry up to 270 passengers and can still perform its air refuelling role.

As Australia phases out the Hornets, all remaining aircraft will use the boom system. While only one aircraft can be refuelled with the boom system compared to two with the hose and drogue system, the much more rapid refuelling rate with the boom means that there will be little difference in the time taken to refuel a given number of aircraft.

The aircraft can also transport up to 270 personnel in seating, the same as found in the civilian version of the Airbus but with the deletion of the seat back video screen

option (so no in-flight movies for the troops!)

MQ-8C Fire Scout Unmanned Helicopter

Northrop Grumman had the MQ-8C Fire Scout unmanned helicopter on display. This is designed for reconnaissance, surveillance, airborne fire support and precision fire support for all armed services and is based on the Bell 407 manned helicopter. This particular variant of the MQ-8 was also intended to offer an unmanned cargo resupply capability for the US Navy.

It has an endurance of 11 hours under standard conditions with a 136kg payload, range of 150nm and a maximum payload capacity of around 318kg. For a video see *"MQ-8C Fire Scout Takes First Flight on USS Jason Dunham"* http://youtu.be/AaG2EDPVBqc

Northrop Grumman MQ-8C Fire Scout unmanned helicopter (rotor blades folded back in transport position).

Aerochute

Aerochute Industries Pty Ltd (www.aerochute.com.au/) is an Australian company founded in 1989 that makes powered parachutes. These consist of a parafoil canopy beneath which is attached the wheeled airframe unit containing engine, fuel, propeller, pilot and passenger seat (if applicable) and cockpit instrumentation.

The company's products are designed to be safe and easy to use as the parachute is spin and stall resistant and there has never been a fatal crash. In the event of an engine stoppage the aircraft will gently descend to the ground like a parachute. There are two models, differentiated by the combined weight of the pilot and passenger that is to be lifted: the Aerochute (standard model) and the Hummerchute (for heavier people).

A typical cruise speed is 60-70km/h, typical flight duration is two hours, take off distance is 10 to 15 metres and the maximum legal height is 5,000 feet.

Aerochute is working with Swinburne University to develop an electric version called the Skymaster Pro. It will be quieter than the petrol model, require less maintenance and the motors can easily be stopped and started in flight for almost silent running. Like gliders, it is possible to catch thermals and glide for many hours.

It will have a pair of motors and a pair of contra-rotating propellers in each of the two ducted-fan pods. This compares with a single motor and propeller in the petrol model. The flight time in the electric motor version is expected to be about 35 minutes and in the petrol model it is about 2

A "flock" of petrol powered Aerochutes in flight.

hours, assuming the flight time is not extended by catching thermals. The battery pack will be field swappable to replace a depleted battery.

A basic Aerochute petrol model costs $26,000 and electric version is expected to be $34-$35,000, GST inclusive although the lifetime running costs of the electric version are expected to be less than the petrol model.

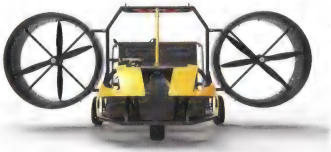

Airframe portion of the electric version of the Aerochute. Each ducted fan pod has two motors and two contra-rotating propellers.

MQ-4C Triton

Northrop Grumman had the MQ-4C Triton unmanned aerial vehicle (UAV) on display. Up to seven of these aircraft will be purchased and will be based at RAAF Base Edinburgh in SA.

The main sensor of the Triton is the AN/ZPY-3 Multi-Function Active Sensor (MFAS) X-band AESA (electronically scanned) radar. It provides a 360° view covering over 5,000 square kilometres in a single sweep and on a mission it can surveil 7,000,000 square kilometres of land or sea. The high resolution radar system can automatically classify targets, so, for example, it can distinguish between a container ship and an unfriendly foreign military vessel.

The Triton can also operate semi-autonomously so the operators only have to specify an area to surveil, speed, altitude and mission objective and the aircraft will notify operators when it finds a specified target of interest. Service ceiling is over 50,000 feet and the aircraft is 14.5m long, has a wingspan of 39.9m and weighs 14.6 tonnes. Maximum speed is 331 knots (613km/h).

The vehicle and the ground control station, communications systems, information analysis, maintenance, logistics

Northrop Grumman MQ-4C Triton unmanned aerial vehicle in RAAF livery. Australia is purchasing seven of these long duration surveillance aircraft.

and other support facilities are collectively known as the unmanned aircraft system (UAS). It is derived from the RQ-4 Global Hawk (which was also on display) but it has strengthened wings and fuselage so that it can withstand hail, lightning and bird strikes and it has anti-icing systems.

These are necessary as, unlike the Global Hawk which cruises at high altitude and stays there, the Triton is designed to be able to make rapid descents to low altitudes for closer inspection of targets or areas of interest. This may involve descending through storm clouds.

Boeing P-8A

The RAAF is to replace its existing fleet of Lockheed AP-3C Orions with a combination of unmanned Northrop Grumman MQ-4C Tritons (see above) and manned Boeing P-8A maritime surveillance aircraft. Australia will be purchasing eight of these, with an option of four more. They will start delivery in 2017 and eight aircraft will be fully operational by 2021. The first eight aircraft will cost $4 billion including support infrastructure.

The P-8A Poseidon is designed for anti-submarine and anti-surface ship warfare, shipping interdiction and signals intelligence. It is capable of carrying anti-ship missiles such as the Harpoon, torpedoes, depth charges, land attack missiles and other weapons. It also carries and drops sonobuoys for detecting submarines.

It is based upon a militarised Boeing 737-800 commercial airliner with 737-900 wings but has significant airframe modifications to allow for a bomb bay and 11 wing and fuselage hard points to attach weapons or sensors and also structural strengthening to allow long duration at a low altitudes (where there will be more wind buffeting than at high altitudes) and high banking manoeuvres as it circles suspect vessels. The aircraft can carry 10,000kg of weapons.

With 34,000kg of fuel the aircraft craft has an unrefuelled range of 4,000nm or 7,500km but it can undergo air-to-air refuelling from the KC-30A. In an anti-submarine warfare mode it can loiter 1,200nm (2,200km) from base for over four hours or with in-flight refuelling it can go on extended missions for as long as 20 hours, deep into the Southern Ocean.

The Poseidon has advanced sensors such as a multi-mode radar, high-definition electro-optical camera, a system for processing acoustic data from sonobuoys with four times the capacity of that on the Lockheed AP-3Cs and numerous radio and satellite data links.

US Navy Boeing P-8A. This aircraft is to replace the RAAF's existing fleet of the Lockheed AP-3C Orions.

Aerosonde

Aerosonde is an Australian-based company making unmanned aerial vehicles. In 1998 it became famous for the first flight of an unmanned vehicle across the Atlantic. In 2006 it was purchased by US company AAI Corporation which in turn became a subsidiary of Textron in 2007.

Aerosonde makes the Mk 4.7 "Small Unmanned Aircraft System" (SUAS). It is a highly flexible platform with day and night capability, surveillance and reconnaissance roles and a multi-payload capability. It has a 14+ hour endurance and numerous scientific and military uses.

For video of this and other AAI UAVs see *"AAI Corporation_UAS Video"* https://youtu.be/oqy6wtl-muo

AAI also make another UAV that is in use by the Australian Army, the RQ-7B Shadow 200 for reconnaissance and surveillance.

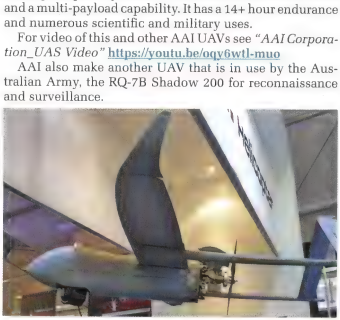

Australian-designed Aerosonde Mk 4.7 UAV

F-35A Lightning II Joint Strike Fighter

Australia has committed to buying 72 Lockheed Martin F-35A Lightning II Joint Strike Fighters (JSF). The F-35A is perhaps the most advanced fighter in production in the world today. Two F-35As have already been accepted by the RAAF and are being used for testing and training.

The F-35A is a multi-role supersonic stealth fighter. It features high manoeuvrability and acceleration, internal weapons stowage, advanced radar, electro-optical and infrared sensors, advanced communications and networking capability and the ability to employ a large array of weapons for air-to-air or air-to-ground use.

The F-35 is very much a software-defined aircraft. In addition to its fifth generation features (see box), the F-35 and other fifth generation aircraft under development are

The F-35A Lightning II, chosen as Australia's fifth-generation fighter.

very software intensive, to the extent that much of the capability of the aircraft is defined by software and not hardware. The F-35 has around 10 million lines of computer code on-board and about the same amount of code in ground support systems such as mission planning and diagnostic software. It even uses software-defined radios for its communications.

The F-35 comes in five model variants. The A model is standard with conventional take off and landing; the B model is the short take off and vertical landing model which has reduced fuel and g-force capability compared to the A model due to its vertical fan; the C model is designed for carrier operations and has folding wing tips and larger wings for improved low speed handling; the I model is an Israeli variant and the CF-35 is a Canadian variant.

There is significant Australian involvement in the manufacture of the F-35; 30 companies are involved as prime manufacturers and many more as subcontractors. One example of Australian participation in the program is the supply of some of the vertical tails by the Australian company Marand. Australian companies have so far won US$432 million dollars worth of contract work and $1.5 billion over the life of the program.

The F-35 Gen III Helmet Mounted Display System.

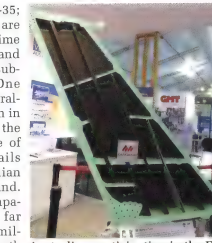

Australian participation in the F-35 program includes some 700 sets of tails!

A key to the effectiveness of the F-35 is the man-machine interface and the essence of this is the pilot helmet, called the F-35 Gen III Helmet Mounted Display System (HMDS), which will each cost a staggering $770,000. The helmet provides the pilot with an augmented reality display, giving a seamless 360° view with either day or night vision.

The Electro Optical Distributed Aperture System combines the feeds of six infrared cameras and other sensors such as radar and target information and creates a synthetic view enabling the pilot to look anywhere and see anything. In fact, if the pilot looks down he won't see his legs and floor of the cockpit but the ground.

As a result of this augmented reality display the F-35 will be the first combat aircraft not to have a heads-up display since they were first introduced around 50 years ago. For videos see *"Get a Pilot's Eye View of the F-35 Head-Up Display – AINtv"* https://youtu.be/Ay6g66FbkmQ and *"F-35 Helmet Display System"* https://youtu.be/w0btzlvlScI

Australia's Defence Science and Technology Organisation (DSTO) is providing support to the F-35 program in a number of key areas.

The present cost of the program for Austrlia, not including the optional fourth squadron is $12.4 billion including facilities, weapons and training or $172 million per aircraft. However, with incentives to cut costs and better management processes the unit cost of each aircraft continues to fall. For example the aircraft cost is down 50% on what it was five and a half years ago. The cost is expected to be US$80 million per aircraft and US$12 million per engine by 2020.

What is a fifth generation fighter?

While there is no strict definition of what a fifth generation fighter is, Lockheed Martin in document A12-36991Q00 include the following key elements.

1) All-aspect advanced stealth (low radar visibility) enables reduced detection and engagement ranges of enemy defence systems or aircraft. Stealth is bought about by shape, embedded rather than external antennas, aligned edges, internal weapons and fuel and special coatings.
2) The sky can be dominated via next-generation avionics and sensor fusion to give the pilot real-time access to battlefield information and an unparalleled ability to dominate the tactical environment. This unmatched situational awareness, along with the aircraft's extreme agility, acceleration and stealth, provides a tactical advantage over all adversary aircraft.
3) Force multiplication and enabling – a network capability allows information gathered by F-35 sensors to be immediately shared with commanders at sea, in the air or on the ground, providing an instantaneous, high-fidelity view of ongoing operations

Some critics have expressed concern that the aircraft has a lesser turn capability than legacy aircraft but it can fly further and faster with a greater payload and greater survivability and it can still pull 9G in a turn and fly at Mach 1.6. In addition it has stealth, a better radar, better sensors than anything else.

Tiger helicopters

The Australian Army had their Tiger Armed Reconnaissance Helicopters (ARH) on display. These are an advanced multi-role aircraft capable of missions such as reconnaissance, surveillance, anti-armour missions, close air support, escort duties and asset protection. It is capable of operating day and night, and in the aftermath of chemical, biological or nuclear war.

Australian Army Tiger Armed Reconnaissance Helicopters (ARH).

The ARH is an Australian variant of the Eurocopter Tiger. In contrast to the standard Tiger it has upgraded engines, a laser target designator for the Hellfire II missiles and provision for 70mm rockets.

The ARH has a lightweight body with a high level of advanced materials such as composites and titanium. It has an advanced four bladed rotor and it can perform loops and negative-g manoeuvres.

In August 2014 the aircraft was upgraded with the "Advanced Precision Kill Weapon System" laser guidance kit to convert the existing unguided 70mm rockets to guided rockets. Video: *"Don't just fly, fly Army: Tiger."* https://youtu.be/gKq0pFNSU3U

It also carries Hellfire II anti-armour missiles and a 30mm cannon which can utilise two different types of ammunition that are stored on the aircraft depending on the particular engagement.

Silvertone's Flamingo

Silvertone Electronics were displaying the Flamingo Mk1 UAV. It is a UAV in the under 25kg class and originally designed as a low cost UAV for farm owners for remote surveillance of their properties.

The airframe is modular so parts can easily be swapped and there is even a twin boom conversion and a variety of motor and landing gear configurations are possible. With high aerodynamic efficiency, this UAV has a longer duration than is typical in this class and can achieve up to seven hours' flight time on its internal 5.6-litre tank with an appropriate configuration (motor type, throttle setting etc.).

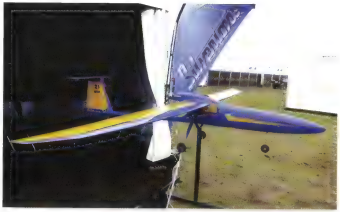

Silvertone Flamingo, designed by Bob Young, a former contributor to SILICON CHIP.

It has a wing span of 4 metres, length of 2.9 metres, a dry weight of 10kg and a maximum weight with both payload and fuel of 20kg. The cruise speed is 52 knots or 96km/h. The UAV also has an auto-pilot for autonomous operation.

A novel feature of this UAV is a payload pannier by which a variety of payload packages can be quickly changed for different missions. It has wing hard points for extra sensors or fuel and the wings have both ailerons and flaps. See www.silvertone.com.au/

(Editor's note: the Flamingo was designed by Bob Young, founder of Silvertone and former contributor to SILICON CHIP magazine. The Flamingo was included in an article entitled "UAVs – an Australian perspective" in the June 2010 issue. See www.siliconchip.com.au/Issue/2010/June/Un-manned+Aerial+Vehicles:+An+Australian+Perspective).

C-17A Globemaster III

Australia's RAAF C-17A Globemaster III was a very popular exhibit. Australia has six of these aircraft with typically five in constant use and the sixth one in maintenance. The maximum payload it can carry is 74,800kg (about four times that of the C-130 Hercules) and it can carry 102 paratroopers or 188 passengers or loads such as an Australian Army Abrams M1A1 main battle tank, five Bushmaster vehicles or three Black Hawk helicopters. Its cargo bay is 20.78m in length. Each of the four engines can produce 40,440 pounds of thrust (180kN). It can carry 138,350 litres of fuel and is capable of air-to-air refuelling from the RAAF KC-30A.

MQ-9 Reaper

The General Atomics MQ-9 Reaper is an armed remotely piloted aircraft made famous for its ability to make precision strikes against terrorists. The Reaper can loiter for long periods of time in enemy airspace with relatively small

weapons loads waiting for the enemy to appear, whilst traditional manned aircraft will continue to be used (for the time being) to drop much heavier weapons loads on defined targets.

A USAF General Atomics MQ-9 Reaper carrying weapons. Australia is very likely to buy these.

A typical ground-based crew consists of a pilot, sensor operator and mission coordinator. The MQ-9 has an advanced sensor and target designation suite including colour, monochrome and infrared video, a video image intensifier, a laser target designator, synthetic aperture radar and there is a capability to detect moving ground targets.

It can be fitted with a wide and ever-increasing variety of weapons such as Hellfire missiles and laser-guided bombs as well as various sensor packages. There are six wing hard points (three on each wing) for attaching weapons. The inner pair can carry 680kg each, the mid pair can carry 270kg each and the outer pair can carry 90kg each (but not all at the same time). In addition, external fuel tanks can be fitted. An MQ-9 with two 450kg external fuel tanks with a weapon load of, say two 500lb bombs can have a mission duration of 42 hours.

The Reaper has also been used as a test-bed for ARGUS-IS and Gorgon Stare (see www.siliconchip.com.au/Issue/2014/December/The+Amazing+ARGUS-IS+Surveillance+System

The MQ-9 has a 712kW turboprop engine, a 20m wingspan, a length of 11m, maximum take off weight of 4,763kg, an internal fuel capacity of 1,770kg, an internal payload of 386kg and an external payload of 1,361kg. Maximum altitude is 50,000 feet and standard endurance is 27 hours. Cruise speed is 169 knots or 313km/h.

3D printing of jet engine

In recent years there has been a revolution in 3D printing. Not only are the machines reducing dramatically in cost but the range of engineering grade materials has greatly increased and now includes many metals and alloys. The extent to which this technology has now developed was demonstrated by world's first "printing" of the turbine assembly and casing of a small jet engine.

This work, a world first for Australia, was undertaken as part of a collaboration between Monash University, Deakin University and the CSIRO and the spin-out company Amaero. In fact, two engines were printed.

One difficulty was that no engine manufacturer likes to have their designs digitised or copied but the French Microturbo (Safran) company kindly supplied and allowed the researchers to scan one of their older engines for printing.

3D printed jet engine, with a close-up showing detail at right.

Printing of metals or "direct metal laser sintering" is somewhat the same as plastics but each slice of a part is "written" by a laser scanning over a bed comprising metal powder. The powder is melted and consolidated by the laser, then the bed is lowered by the thickness of a slice, new powder is added and the process is repeated. After printing, the object is removed from the bed of powder.

Some production components manufactured by this process are already in use, including SpaceX's SuperDraco rocket engine.

3D printing of metals offers the possibility of creating extremely complex shapes which are impossible or prohibitively expensive by normal processes and also it offers the possibility of reducing spare parts inventories as parts could be "downloaded" and printed on demand.

Videos to see: *"3D Printing of a small Jet Engine"* https://youtu.be/nCcK-XSuaHs and *"Australian Researchers Unveil World's First 3D Printed Jet Engine"* https://youtu.be/odHppdY4Pcg

Engineered Material Arrest System

Following on from last month's feature in SILICON CHIP about aircraft weather radar and flight safety is an important product designed to arrest aircraft that fail to brake correctly on landing.

The Flight Safety Foundation analysed flight safety data for the period 1995 to 2008 and found that aircraft runway over-runs happen 2-3 times per month, are responsible for 97% of runway accidents and 30% of all aircraft accidents. Runway over-run accidents are also responsible for 83% of all fatalities in runway accidents.

There are two ways to provide for safe aircraft arrest in the event of an over-run. Both involve "Runway End Safety Areas" or RESA. One type of RESA may be simply a suitable length of land past the runway in which the aircraft may continue to attempt to stop. The other type of RESA is EMAS (Engineered Material Arrest System).

Zodiac Arresting Systems engineer a type of modular

A Bombardier CL600 aircraft safely arrested by EMASMAX in a runway over-run incident saving the lives of 34 passengers and crew. This incident occurred on January 19, 2010, at the Yeager Airport in Charleston, West Virginia.

cellular crushable concrete panel which is permanently installed at the runway ends. Aircraft running into this material after an accidental over-run are effectively bogged and stopped in a controlled manner with no passenger injuries and little or no aircraft damage.

The material is available in a variety of strengths and other characteristics depending upon the size of aircraft to be arrested. The material also has other applications such as surrounding buildings to stop terrorist vehicles being driven into them. For a video on this material see *"EMASMAX by Zodiac Arresting Systems"* http://youtu.be/emcSX1kijXM

Telemedicine

One call that one never wants to hear over an airline PA system (apart from "Brace! Brace! Brace!") is "Is there a medical doctor on board?". Unfortunately there may not be and if a passenger has a serious medical episode their condition could deteriorate or they could lose their life in the time it takes to land at a suitable airport.

Tempus IC by Remote Diagnostic Technologies Limited is a vital signs "telemedicine" monitoring unit that can be used by relatively untrained airline staff to measure the vital signs of a sick passenger and transmit both the vital signs and establish a voice link to a medical doctor at a monitoring station. The Tempus IC measures such parameters as blood oxygenation, pulse and respiration rate, temperature, blood pressure and blood glucose level. It can also transmit a 12-lead diagnostic ECG signal. In addition, still pictures and video of the patient can be transmitted to the medical response centre.

The device is designed to be intuitive and easy to use by staff with minimal training (about half a day). Once patient data has been analysed at a medical response centre, the staff will be advised what course of action is to be taken, including whether the aircraft has to be diverted immediately, or whether it is safe for the patient for the aircraft to continue to its destination.

The Tempus device communicates via satellite and is compatible with a wide variety of satellite communication systems already found on aircraft and also communications

The Tempus IC telemedicine unit which transmits vital signs to medical professionals at a ground station.

accessible via an aircraft's IFEC (in flight entertainment and communications) systems.

Panther Airfield Fire Truck

The RAAF had on display one of its 19 Panther Airfield Fire Trucks. Looking like something out of Gerry Anderson's *Thunderbirds*, this RAAF Panther Airfield Fire Truck was an impressive sight.

Made in Austria, the vehicle has six wheel drive, an air-conditioned cabin (for one driver and three crew) and can shoot water a distance of 70 metres.

The RAAF's Panther Airfield Fire Truck.

Each truck can carry 8,500 litres of water, 1,300 litres of fire retardant foam and can spray at 6,200 litres per minute. It also has a dry chemical powder extinguishing system. Weight is around 36 tonnes, maximum speed is 120km/h and it is powered by a 14-litre Series 60 DDEC V Detroit Diesel.

Conclusion

The relentless advance of electronics, powerful computer capability and miniaturisation continues to dominate development in aerospace and defence technologies as well as the networking of various systems to provide excellent situational awareness.

As far as Australia is concerned, we have significant participation in major international projects such as the F-35 and in addition to that, Australia's military aviation power, always significant for Australia's relatively small population, seems to be greater than it ever has been. Unfortunately, in this troubled world, it needs to be. SC

NAVMAN MiVue Drive

Review By
Leo Simpson

Many readers have GPS navigation in their cars and some also have a dashcam to record the details of every trip they take. But who wants to have two devices stuck to the windscreen to provide these functions? Now you can have the two functions combined, in the Navman MiVue Drive.

I have used GPS satellite navigation in my car for about the last six or seven years, mainly for long trips and especially when I am interstate. I generally don't use it for local trips as I regard it as an unnecessary distraction. In fact, once you have travelled to a destination a couple of times, I don't think you should need any guidance at all – you should know the way!

However, I concede that GPS navigation *can* have benefits when you are travelling on a familiar route and that involves helping you keep tabs on speed limits and speed cameras. It can do this even if you do not have destination programmed into the unit. Avoiding one speeding fine can easily save more than double the price of a GPS unit.

But this combined unit from Navman offers the dash camera/recorder as well so I looked forward to trying it out. Some people might think that having a camera running permanently while you drive is only for those who are paranoid about accidents. But no matter how careful a driver you may be, you cannot always anticipate every accident, especially those which might involve a driver ignoring a red light.

In fact, only few days ago I was confronted by a driver turning right in front of me as he ignored a red light. I avoided a collision by braking and was so astonished that I had to check that I had not run a red light myself. And then to compound the astonishment, a similar incident occurred later in the same day!

Finally, only yesterday as I drove home, I was just about to turn left (from the left lane) and the driver in the centre lane next to me also turned left, right in front of me. Are these people all on drugs?

If any of these potential accidents had actually occurred, the MiVue Drive would have recorded every second, including my startled undeleted expletives! The video evidence would have completely dispelled any doubts about the accident and whose fault it was. So maybe these cameras are not for the paranoid after all – they are worthwhile insurance!

Installing it

The MiVue Drive looks very similar to a host of other GPS units, with a 5-inch (diagonal) screen and a couple of

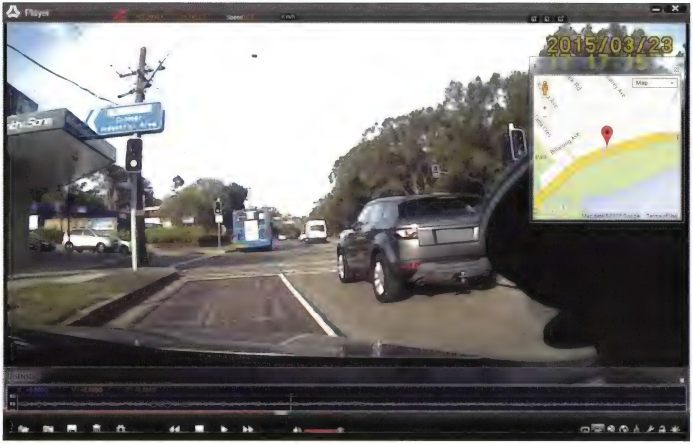

Almost . . . but not quite. The turkey in the middle lane decided it would be a good idea to turn left right across my bows – if there had been an accident (just avoided!) I would have had all the evidence I needed against him/her/it.

small buttons at the top. The camera lens is on the back of the unit (so it faces out through the windscreen).

The unit is held in an adjustable mount which is meant to be affixed to the windscreen or top of the dashboard with the usual suction cap arrangement. . . except that I found it very awkward to find a satisfactory position which did not block my vision of the road ahead.

This is partly because I am tall and because the windscreen is steeply raked (as is the case in many cars). In the end I managed to fold the mount and install the Mivue to the left of the instrument binnacle. This was OK for the GPS functions but not quite ideal for the camera/recorder as it partially obscured the camera's wide angle view (see photo).

The solution would be a much more compact mount, or at least one that does not block the camera in any configuration.

Once the MiVue is mounted it needs to be connected to 12V DC via one of the car's accessory sockets. It would be great if the cable could be better concealed rather than having it draped around the instrument binnacle and then down to the socket in the centre console. This is a problem common to all cars and would solved by having more accessible 12V DC sockets.

If you have had any previous experience with GPS units such as those made by Tom-Tom, Garmin or Navman, the MiVue is certainly easy to use.

When first turned on, the touch-screen is divided into eight labelled panels and you can easily find your way around most of the navigation features. And while Navman caution against changing settings while you drive, it is quite straightforward; not that I would recommend more than a momentary button press or two when you are on the move.

You have a choice of map formats and it changes to a different format when you are driving at night. Maps for daytime use typically have a light background while those at night have a dark blue background.

There is much to like about the map displays – I chose the 3D perspective view. The current address you are passing on your left side is displayed in a small panel at the bottom of the screen, while the current speed limit is shown in a circle with a red border in the lower left-hand area of the screen.

If you exceed the speed limit, the unit chimes and the speed display brightens and stays that way until you drop back below the limit. You can set the alarm to sound if you are 5km/h or 10km/h over the limit. The lower threshold would seem to be mandatory if you are to avoid getting caught by the myriad speed cameras around the country.

If you have set your destination, the trip information is displayed in five panels down the right-hand side of the screen. Each panel measures about 16mm x 12mm which means that a larger type font could easily be used – the displayed font is simply too small when you are driving in bright sunlight and even harder to see if you are wearing sun-glasses.

At more subdued light levels, the readings can be easily seen but why not make the font about 20% larger? The same comment could be applied to most of the info displayed

It's quite intuitive – you really don't need to download the 85-page manual unless you *really* want to!

When you turn it on the next time, the last-stored location comes up (complete with speed camera symbol!)

on the screen – make it bigger!

Mind you, this problem of compromised visibility is common to all GPS units which attach to a steeply raked windscreen. They really need some sort of hood to restrict the amount of ambient light hitting the touch-screen.

The information displayed in the above-mentioned panels is (running down the screen) arrival time, distance to destination, time (in minutes) to destination, current speed and local time.

With the exception of the current speed and local time, the other readings are estimates based on typical traffic conditions and they change as your trip proceeds. Generally, for longer trips in the city and country regions, the estimates can be surprisingly accurate – within a few minutes for a trip that might last for several hours.

The spoken announcements (of which several "voices" are selectable) are generally very good and they often include references easily recognised local land-marks, eg, "Turn left at the cinema" or "Turn right after the church".

In some cases, the map display will change to what looks like an actual photo of an intersection so that you can clearly recognise where you are headed. In fact, given my remarks about display visibility in bright sunlight, it must be said that most of the time the spoken instructions are really all you need.

During your trip or when you arrive at your destination you may want to buy petrol, go to a restaurant, go to hospital or visit a doctor or dentist, get cash from an ATM. The MiVue Drive will find all available points of interest at just a few touches on the screen and is great boon when you are visiting an unfamiliar place.

GPS receiver sensitivity

When you first start your car, the GPS turns on immediately and shows the current time and the map display that was present at the conclusion of your last trip. Depending on the weather conditions (fine, raining or with heavy cloud) the unit can take up to three minutes or so before it gets a fix on the satellites and then it updates the map display, speed and other screen info. If it cannot get a fix, it displays "Acquiring GPS Signal", as seen above.

Of course, if you are driving without needing directions that is not a problem, apart from the fact that the unit will not be able to warn you about school zones or speed cameras. But if you are going to a programmed destination, you have to wait for a satellite fix before the MiVue can do its job.

A similar comment applies when you are driving through areas which have a very heavy tree cover or in the "canyons" of city streets with high buildings whereby the unit will lose the GPS satellites. This is something you need to be aware of with all GPS satellite navigation and it also applies when you are driving through tunnels, although most extrapolate your position and have you quite close to where it thinks you should be when you emerge.

Map updates

One big advantage of the MiVue is that it comes with life-time free monthly map updates for Australia and New Zealand. This is a pretty straightforward process whereby you log on to the Navman website, hook up the MiVue to your computer via a USB cable and download the latest update.

The update is quite large and can take quite a while but again, this general comment applies to updates for all GPS units. You can also purchase maps for any country which is handy if you want to take the unit overseas. Think about it: if you have a hire car, having a GPS **and** dash cam could be most useful.

Dash camera

Overall, I can give a general tick of approval for the MiVue when it is used for GPS navigation. It is quite intuitive to use and there is really isn't any need to refer to the 85-page instruction manual which you can down-load from the Navman website.

Now we come to the dash camera. For the most part, it works like any other dash cam, (also known as a "crash cam", for obvious reasons!) recording to its microSD card all the time the engine is turned on or more particularly, any time there is power at the accessory socket.

Our review sample did not come with the normally supplied 8GB microSD card, so I purchased a 32GB card which is the maximum it will take. You need to log on to the Navman website to check for card compatibility, as the list of approved cards is fairly limited.

By the way, the MiVue also has a mini jack socket so you can plug in a rear view camera. This is a handy feature, meaning that you do not need a separate video display but there is no video recording for this function. As an aside, we can imagine that being a feature of future dash cams,

When the unit locks onto enough valid GPS satellite signals, it loads your current position and track.

Here's the difference between the daytime and night-time screens in GPS (yes, we know it says 7.06am . . .)

with continuous video recording of what is happening at the front and rear of the vehicle.

The MiVue camera is quoted as having a 120° wide angle and with 720p HD recording. It incorporates a 3-axis accelerometer so it continually records the G-forces on the car, as well as your speed and GPS coordinates.

The MiVue breaks the video records into variable size blocks, some as small as 4MB while others can well over 1GB, for a trip which might only last ten minutes or so. So it is about 100MB a minute.

Therefore a 32GB card is good for more than five hours of recording. Once the card is filled to capacity, it over-writes previous video clip unless they have been "locked".

If you have a collision that particular video sequence will automatically locked but you also have the option of locking the video recording at any time by either tapping the touch-screen sharply or pressing the small button at the top of the unit. The latter approach is trickier than it sounds; tapping the screen is much easier.

So all the dash cam functions happen automatically and you normally don't give it a thought while you are driving, unless you want to particularly store an immediate sequence where some driver has just behaved like an idiot.

The really interesting aspects of the dash camera are

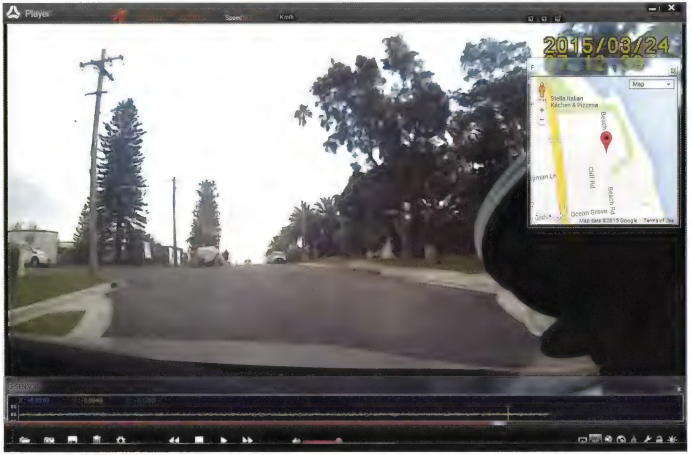

Here's a good idea of what we're saying about the Navman mount obscuring a significant amount of what the camera would otherwise see out the window. The graph at the bottom of the screen is the accelerometer data from the journey.

As well as the video of the last journey, the unit stores information on previous trips including dates and times.

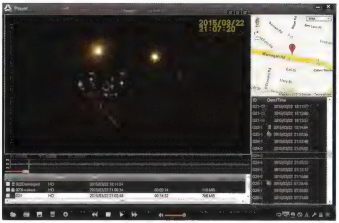

Unless you're in an extremely well-lit area (and this road's not too bad) night-time recordings are not all that useful!

revealed when you play back the recordings. You can do this with the camera itself but it does not show the speed or other information and the small screen is not really convenient. So if you want to really see the details of a particular trip, you need to remove the microSD card and plug it into you computer.

When you open its directory, you will find only two files: Default Folder.ini and Navman Player.exe. Clicking on the latter file loads a video player into you computer and then you can see all the video clips listed and you can play them at will.

And as I had not used a dash camera previously, I found it to be a real eye-opener. I hasten to add that is showed my driving to be generally very conservative and that I rarely exceed the speed limit for more than a few km/h (yes, yes I am a great driver, rhubarb, rhubarb...).

But to see it all unfold before you, every second of the way, is quite staggering. No only does it show your speed and the G-forces in the X, Y and Z-axes, it also includes the section of the Google map which shows your location at every point along the way.

How does it do that? Apparently the Navman program accesses Google Earth and plugs in the recorded GPS co-ordinates to access the map. Oh, and you can also choose the satellite view if you wish.

But the most staggering revelation was the accompanying audio recording. It records everything – and I mean everything: every comment, whether obscene or not, every belch, bird call, the spoken announcements of the GPS mode, wind noise if you have the window down, the radio program you were listening to, your conversation with whoever else is in the car ... absolutely everything!

It does not take too much though to realise that this could be major drawback. Sure, you can turn the audio down when you are playing back clips but there does not appear to be any way of preventing audio recording. So if you do decide to purchase one of these and have the dash cam going permanently, make sure you are always on your best behaviour. If you act like an idiot, the evidence will be in audio recording!

One point that should be noted is that if your are driving before the unit gets a fix on the satellites, the dash camera will not record your speed or the GPS coordinates and nor will you be able to access the accompanying map Google map display during playback.

We have included a number of screen grabs of the camera recordings to show the picture quality. Our assessment is that the quality is acceptable but it tends to be a little washed out and is not good enough to record number plates while driving. It will record the number plate of a vehicle which is a few metres ahead of your vehicle. If you want to have registration numbers recorded while you are driving you need a camera capable of recording in 1080p.

Conclusion

The MiVue Drive is a fascinating piece of kit, combining GPS navigation with dash camera/recorder. Ultimately, everyone will have a unit like this in their car.

For further information, contact your local consumer electronics retailer or go to www.navman.com.au SC

In certain locations, the GPS display switches to a 3D image – very handy if you don't know the area.

If you're close, you can certainly capture number plates (and other detail). But 720p is not exactly high resolution.

KCS TraceME

LoRa ™ Internet of Things

KCS has extended their successful TraceME product line with an advanced module, targeted for worldwide mobility in the Internet of Things era. The latest development of the TraceME GPS/GPRS Track and Trace module will combine the RF location based positioning solution with the LoRa™ technology. This combination offers 'smart objects' being even smarter, since LoRa™ enables long range, battery friendly communication in a wide variety of (M2M) applications. Supporting GPRS/SMS and optional 3G, Wi-Fi, Bluetooth LE, ANT/ANT+ and iBeacon™ provides easy integration with existing wireless networks and mobile apps. Other variants in the high/mid-range and budget-line will follow soon.

ANTI-THEFT module based on RF

KCS TraceME product line offers an intelligent location based positioning solution for indoor and anti-theft applications.The solution is based on RF with an intelligent algorithm of measuring the propagation time of transmitted (proprietary protocol) signals. Unique features are: minimum size (46x21x6.5mm), weight (7 grams for fully equipped PCB) and a standby battery lifespan of more than 10 years.Listen before talk' algorithm makes it practically impossible to locate the module, which secures the valuable vehicle or asset. Supporting GPRS/SMS and optional 3G, Wi-Fi, Bluetooth LE, ANT/ANT+ and iBeacon provide easy integration with existing wireless networks and mobile apps.

www.Trace.ME

All trademarks mentioned herein belong to their respective owners.

Appliance Earth Leakage Tester

By JOHN CLARKE

Used in conjunction with a digital multimeter, this Appliance Earth Leakage Tester can be used to check the safety of earthed and double-insulated equipment. Most importantly, it tests equipment when it is powered from the 230VAC mains supply and operating normally.

Features & Specifications

Features

- Monitors earth leakage current via imbalance between Active & Neutral current flow
- Measurement displayed on multimeter in voltage mode
- AC output and true RMS (DC) output
- Easy measurement conversion (100mV on the DMM = 1mA leakage current)
- Powered from a 9V battery; power LED indicates battery state

Specifications

Frequency response: <10Hz to >6kHz (-3dB)
Linearity: <1% deviation for measurements from 1-5mA
True RMS: crest factor up to 5
Power supply: 9V battery
Current drain: typically 2.5mA
Battery voltage: operates down to 7.4V; indicator LED indicates battery state

IN LAST MONTH'S issue, we presented the Appliance Insulation Tester which tests at 500V or 250V DC. However, that tester cannot do a proper test of any appliance which is switched on by remote control or does not use a mechanical on/off switch.

Such appliances are very common these days, starting from large-screen TV sets and working down from there. Chances are that you have a dozen or more appliances with remote-controls or pushbutton switches. In the latter class will be washing machines, microwave ovens and vacuum cleaners.

So this Appliance Earth Leakage Tester is an essential item to have on hand if you want to be sure that none of your appliances presents a safety hazard. As we noted in last month's arti-

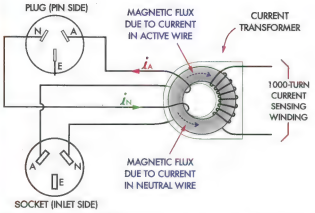

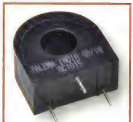

A life-size view of the Talema AC1015 15A current transformer used in this design.

Fig.1: how earth leakage current is measured. The Active & Neutral leads to the appliance are fed through a current transformer and if the currents in them are unequal, the transformer produces an output from its secondary.

cle on the Appliance Insulation Tester, you should not rely your home's safety switches (RCDs) to fully protect you.

If one of your appliances does become faulty and you are unlucky enough to be in the fault current path, the RCD may well save your life but you could still get a very severe shock in the process. And you if you have a weak ticker, the RCD may not save your life – there is no absolute guarantee!

Measuring earth leakage

Our Appliance Earth Leakage Tester is based on a low-cost current transformer. It comprises a ferrite toroid through which are wound 1000 turns of enamelled wire connected to two output pins. The transformer is encapsulated in resin with a hole in the centre to allow the primary windings to be fed through. Isolation between the centre hole and secondary winding is 4kV. Further isolation is provided because the wires that pass through the core will also be insulated.

The particular transformer we are using is rated for up to 15A primary current and up to 60A before core saturation.

To measure the earth leakage current of an appliance, the Active and Neutral wires are passed through the centre hole of the current transformer, as shown in Fig.1. If there is no earth leakage current, the magnetic flux due to the Active and Neutral currents will cancel and there will be no output voltage generated by the 1000-turn secondary winding of the transformer.

On the other hand, if the Active and Neutral currents are not exactly the same, then the difference between those currents will be due to a leakage path to earth. As a result, there will be a differential magnetic flux and there will be a resulting output voltage from the 1000-turn secondary winding.

For Class 1 appliances where the exposed metal parts are connected to mains earth, the leakage current can be directly measured.

Alternatively, for double insulated equipment where the mains earth is not connected to the appliance, an earth probe must used to connect any exposed metal to the mains earth so that the leakage current can be measured.

Amplifying the voltage

Now even though the transformer has a 1000-turn secondary winding, its output is quite tiny at about 1µA per mA (or 100µV/mA across a 100Ω load) and this is far too low to be useful. We would need to amplify this by a factor of 1000 to produce a useful signal of 100mV per mA of differential current.

This amplified signal can be measured directly with a digital multimeter, using the low AC voltage ranges. Mind you, if you do use a digital multimeter, it should be a "true RMS reading" meter. Multimeters that do not have true RMS readings are prone to severe reading errors if the leakage current waveform is non-sinusoidal, as is common with switchmode supplies and rectified supplies in mains equipment.

Since most DMMs are not "true RMS reading", the circuit described here includes a true RMS AC-to-DC converter to allow the multimeter to accurately measure the leakage current on its DC voltage ranges.

As an aside, when an appliance contains a switchmode power supply, any earth leakage current will contain components at 50Hz, 100Hz plus many higher frequency components exceeding several kHz. Electromagnetic interference (EMI) suppression filtering in the appliance will suppress but not eliminate frequencies higher than this.

Circuit details

As mentioned above, the signal output from the current transformer's winding is very low with a 100Ω resistive load. A low resistance load is necessary to ensure the output is linear with respect to the appliance earth leakage current.

However, an alternative method that does not require a low value loading resistor but still results in a linear response is to convert the current in the transformer secondary winding to a voltage using a transimpedance amplifier.

This is shown in the main circuit of Fig.2 which has one side of the current transformer secondary tied to half the supply voltage (Vcc/2) and fed to the non-inverting input (pin 3) of op amp

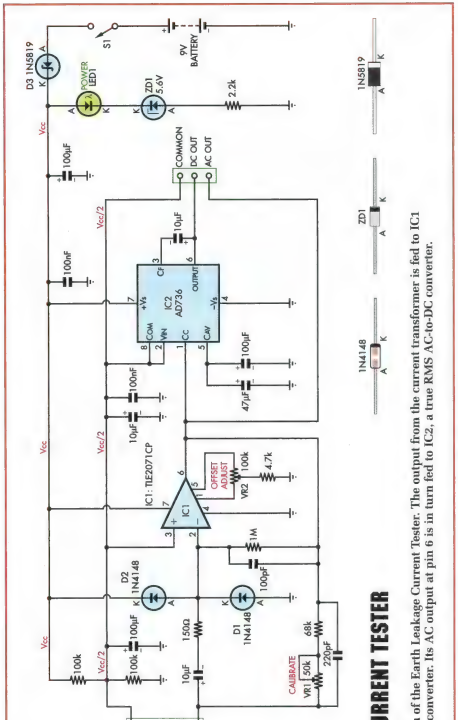

Fig.2: the complete circuit diagram of the Earth Leakage Current Tester. The output from the current transformer is fed to IC1 which acts as a current-to-voltage converter. Its AC output at pin 6 is in turn fed to IC2, a true RMS AC-to-DC converter.

The Appliance Earth Leakage Tester is housed in a standard UB1 plastic utility box and is fitted with a PCB front panel. The panel comes pre-drilled with screened lettering, to minimise case preparation.

IC1, a TLE2071CP. IC1's inverting input (pin 2) monitors the other side of the transformer via a 10µF capacitor and 150Ω resistor.

IC1 acts as the current-to-voltage converter. Its transimpedance value is 100mV/µA which, when combined with the transformer's input:output ratio, results in the required 100mV/mA of differential current. But due to the way it works, no voltage appears across the transformer, so the load impedance "seen" by the transformer is very low.

The 150Ω resistor between the transformer and op amp input pin 2 is there to limit current flow in diodes D1 and D2 should the output from the transformer exceed the supply rails. Diode D2 limits the input to pin 2 at just over the Vcc supply, while D1 limits the input to just below the ground. Note that the earth leakage would need to be around 45A before the diodes begin to conduct but that could happen with a major short to earth in an ap-

pliance under test.

The aforementioned transimpedance value is determined by the 68kΩ resistor and series-connected 50kΩ trimpot VR1 between pin 6 of IC1 and the transformer secondary. The 100pF and 220pF capacitors across the feedback resistances provide a ~6.5kHz high-frequency roll-off, preventing RF pick-up in the amplified waveform.

The DC offset at pin 6 due to Vcc/2 is zeroed out using VR2. Any DC offset will typically be within 0.34mV of the Vcc/2 rail but in the worst case could be up to 4mV and this is fixed by adjusting this trimpot.

IC1's output connects to the AC output terminal (for measurement with a DMM) and is also fed to pin 1 of IC2, an AD736 true RMS AC-to-DC converter. As shown in Fig.3, the AD736 comprises an input amplifier, a full-wave rectifier, an RMS core, an output amplifier and a bias section. The input amplifier has two inputs: a high

Parts List

1 double-sided PCB, code 04203151, 86 x 130mm
1 PCB, coded 04203152, 88 x 26mm
1 blue PCB, code 04203153, 90 x 151mm (front panel)
1 UB1 jiffy box, 158 x 95 x 53mm
1 15A current transformer, Talema AC1015 (RS Components 537-4508) (CT1)
1 1.5m mains extension lead
1 150mm length of 10A Earth wire (green/yellow)
1 double-screw BP connector to join Earth wires in mains cable
2 BP connectors to join Active & Neutral wires
1 9V PCB-mount battery holder (Altronics S-5048, Jaycar PH-9235)
1 9V battery
2 8-pin DIL IC sockets (optional)
2 cordgrip grommets to suit 10A 3-core mains cable (7.4-8.2mm diameter) and 3mm-thick case (Altronics Type C, Cat. H-4280) (Do NOT use cable glands)
1 black shrouded safety multimeter test lead (Altronics P-0404A, Jaycar WT-5325)
1 set of shrouded banana to banana test leads (Altronics P-0414)
1 SPDT toggle switch, PCB-mount (Altronics S-1315) (S1)
1 red safety banana socket (Jaycar PS-0420)
1 black safety banana socket (Jaycar PS-0421)
1 green safety banana socket (Jaycar PS-0422)
1 yellow safety banana socket (Jaycar PS-0423)
3 No.4 x 6mm self-tapping screws for 9V battery holder
4 M3 tapped x 15mm spacers
8 M3 x 6mm machine screws
6 100mm cable ties
3 PC stakes
1 50mm length of 0.7mm diameter tinned copper wire
1 50kΩ multi-turn trimpot (code 503) (VR1)
1 100kΩ multi-turn trimpot (code 104) (VR2)

Semiconductors

1 TLE2071CP PDIP low-noise high-speed JFET op amp (RS Components Cat. 834-140, element14 Cat. 2387529) (IC1)
1 AD736JNZ PDIP True RMS AC-to-DC Converter (RS Components Cat. 522-9133, element14 Cat. 9605061) (IC2)
2 1N4148 diodes (D1,D2)
1 1N5819 1A Schottky diode (D3)
1 5.6V 1W zener diode (ZD1)
1 3mm high brightness red LED (LED1)

Capacitors

3 100µF 16V PC electrolytic
1 47µF 16V PC electrolytic
3 10µF 16V PC electrolytic
1 100nF MKT
1 220pF ceramic
1 100pF ceramic

Resistors (0.25W, 1%)

1 1MΩ	1 4.7kΩ
2 100kΩ	1 2.2kΩ
1 68kΩ	1 1kΩ*
1 10kΩ*	1 150Ω

* for calibration

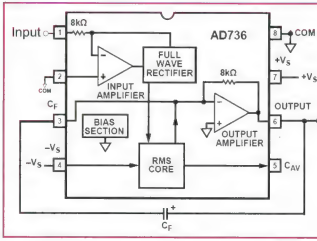

Fig.3: inside the AD736 True RMS AC-to-DC Converter. It comprises an input amplifier, a full-wave rectifier, an RMS core, an output amplifier & a bias section.

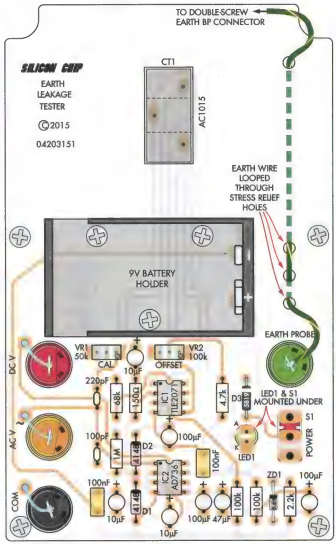

Fig.4: follow this PCB layout diagram and the photo at left to build the unit. Note that LED1 & power switch S1 are mounted on the underside of the board.

impedance buffered input at pin 2 and a low impedance, wide dynamic range input at pin 1. We use pin 1 input as it produces a wider frequency response.

The output of the input amplifier is full-wave precision-rectified before the signal is applied to the RMS core. RMS conversion essentially squares, averages and then takes the square root of the value. Averaging is done using capacitor C_{AV} at pin 5 (ie, the 47µF & 100µF capacitors connected in parallel on the circuit).

The output amplifier buffers the output from the RMS core and allows for optional low-pass filtering to be performed via external capacitor C_F (10µF in our circuit), which is connected across the feedback path of the amplifier. This additional filtering stage helps reduce any output ripple

Table 2: Capacitor Codes

Value	µF Value	IEC Code	EIA Code
100nF	0.1µF	100n	104
220pF	NA	220p	221
100pF	NA	100p	101

Table 1: Resistor Colour Codes

❑	No.	Value	4-Band Code (1%)	5-Band Code (1%)
❑	1	1MΩ	brown black green brown	brown black black yellow brown
❑	2	100kΩ	brown black yellow brown	brown black black orange brown
❑	1	68kΩ	blue grey orange brown	blue grey black red brown
❑	1	4.7kΩ	yellow violet red brown	yellow violet black brown brown
❑	1	2.2kΩ	red red red brown	red red black brown brown
❑	1	1kΩ	brown black red brown	brown black black brown brown
❑	1	150Ω	brown green brown brown	brown green black black brown

that is not removed by averaging capacitor C_{AV}.

Power supply

Power for the circuit is provided by a 9V battery, fed via reverse polarity protection diode D3 and switch S1. A 100µF capacitor bypasses the resulting nominal 8.7V supply. In addition, the supply rails to IC2 are decoupled using 100nF capacitors, one across the Vcc supply and another across Vcc/2.

Battery voltage indication is provided by LED1 connected in series with 5.6V zener diode ZD1 and a 2.2kΩ resistor. When the battery is fresh there will be an 8.7V supply. With a nominal 1.8V voltage drop across the LED and 5.6V across ZD1, that leaves 1.3V across the 2.2kΩ resistor and so there is a 590µA LED current which gives a relatively bright LED (a high brightness LED is specified).

As the battery goes flat, the battery voltage decreases and so the current through the LED diminishes. The LED current drops to near zero with a 7.4V supply which is about the end point for the battery as far as this circuit is concerned.

Construction

The assembly is straightforward, with most of the parts mounted on a PCB coded 04203151 and measuring 86 x 130mm. This is housed in a UB1 plastic case (see photos) and a second PCB coded 04203152 (88 x 26mm) is slid into the side pillars of this box to provide the necessary isolation between the mains wiring and the low-voltage measurement circuitry.

A third PCB coded 04203153 (90 x 151mm) is used as the front panel. It takes the place of the original plastic lid and is screen printed and predrilled.

Fig.4 shows the parts layout on the PCB. Most of the components are mounted on the top side, the exceptions being LED1 and power switch S1 which are mounted on the underside.

Begin construction by installing the resistors. Table 1 shows the resistor colour codes but we also recommend checking each one with a multimeter before installing it on the PCB, as some colours can be difficult to read.

Diodes D1-D3 and zener diode ZD1 can go in next. Be careful not to get these mixed up and make sure they are installed with the correct orientation.

Follow with the two ICs, again taking care to ensure that they are orientated correctly (they go in with their notched ends towards the battery holder). Note that IC1 is the TLE2071 while IC2 is the AD736. You can either solder them directly to the PCB or install them using IC sockets.

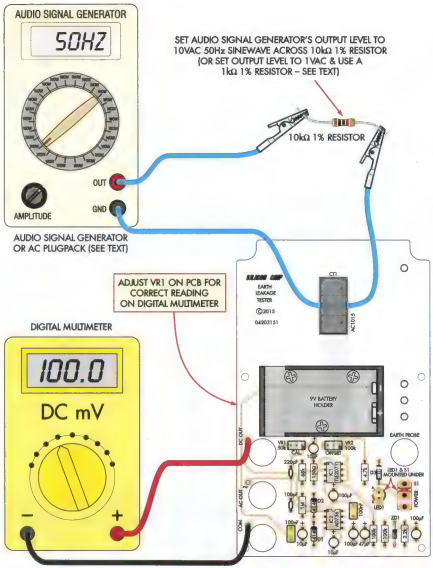

Fig.5: this diagram shows the set-up used for the calibration procedure. It involves passing a 1mA current through the current transformer and then adjusting VR1 for a 100mV reading on the multimeter (see text overleaf for further details).

The next step is to fit PC stakes at the Common (COM), AC and DC output connection pads (these stakes are later wired to the three output terminals). Once they're in, install the capacitors. The MKT and ceramic types can be installed either way around but the electrolytic types are polarised and must be orientated as shown on Fig.4. Note that the positive leads are longer.

VR1 & VR2 are next and must be fitted with their adjustment screws positioned as shown. VR1, a 50kΩ trimpot, could be marked as 503, while VR2, a 100kΩ trimpot, could be marked as 104. Don't get them transposed.

The battery holder and current transformer can now be mounted in place. The battery holder is held in place using three No.4 x 6mm self-tapping screws.

Underside components

All that remains now to complete the PCB assembly is to install LED1 and switch S1. These both go on the underside of the PCB. Install the switch first, then fit a single nut to its mounting thread and wind it all the way up to the switch body.

Don't solder the LED in place though. For the time being, simply push it down onto the underside of the PCB, making sure that its anode lead is orientated as shown. Its leads

This is the view inside the completed Appliance Earth Leakage Tester. Arrange the wiring so that the Earth BP connector will be on one side of the current transformer and the Active & Neutral connectors on the other side and don't leave out the barrier PCB.

will be soldered later, when the front panel is fitted to the PCB.

Adjustment & calibration

Now for the test and calibration procedure.

First, insert a 9V battery into the holder and switch on power. Check that there is power (approximately 8.7V) between pins 7 & 4 of both IC1 and IC2. Pin 3 of IC1 and pins 2 & 8 of IC2 should be at half the supply. This voltage can be measured with the multimeter's negative probe connected to the 0V rail.

The next step is to adjust the DC output offset at pin 6 of IC1. That's done by connecting your multimeter (set to measure DC mV) between the COM and AC V terminals on the PCB and adjusting VR2 so that the reading is as close to 0mV DC as you can set it. For example, we were able to adjust our prototype to obtain a reading which flickered around 0.05mV.

Important note: even though you are measuring between the AC V and COM terminals on the PCB, you are adjusting for a minimum DC voltage and you should get a reading which is a fraction of a millivolt DC. If you accidentally switch to the AC millivolt range on the DMM, you are likely to get a much higher reading because the circuit will be reacting to stray hum fields.

The next step involves passing a current of 1mA (or thereabouts) through the transformer and you can do this with a sinewave signal generator that can deliver a 10VAC signal at 50Hz.

The set-up is shown in Fig.5 and uses a series 10kΩ resistor to provide the 1mA current via a single wire loop through the current transformer. First, connect the signal generator probes as shown and adjust the level for 10VAC RMS across the 10kΩ resistor, as measured with a multimeter. That done, connect your multimeter (set to measure DC mV) between the DC V and COM PC stake terminals on the PCB, apply the 1mA signal through the toroid and adjust VR1 for a reading of 100mV DC.

If your signal generator cannot deliver 10VAC across the 10kΩ resistor, just set it to the maximum available and note the signal level reading. Then adjust VR1 for a reading that corresponds to the current flowing through the 10kΩ resistor. So if, for example, your signal generator can develop a 3VAC signal across the 10kΩ resistor, adjust trimpot VR1 so that the multimeter reads 30mV when connected to DC V and COM.

If your signal generator only delivers 1VAC or thereabouts, a 1kΩ 1% resistor should be used instead of the 10kΩ resistor to provide the required 1mA calibration current. The calibration accuracy needs to be within ±5%.

If you don't have an audio signal generator, you can do the calibration with an AC plugpack. For example, we found a 9VAC plugpack in the junkbox and measured its output across a 10kΩ resistor. It was 10.45V. In that case, 10.45V across the 10kΩ resistor would result in a current of 1.045mA through the toroid and you would adjust VR1 for a reading 104.5mV DC.

Final assembly

With the calibration now complete, you can finish the PCB and front panel assembly and install it in the case.

Begin by fitting the red, black, yellow and green shrouded banana sockets to the front panel PCB and secure them with the supplied nuts. Do not over-tighten these nuts; if you do, the plastic thread will be stripped. The red socket is for the DC output, the yellow for the AC output, the black for Com-

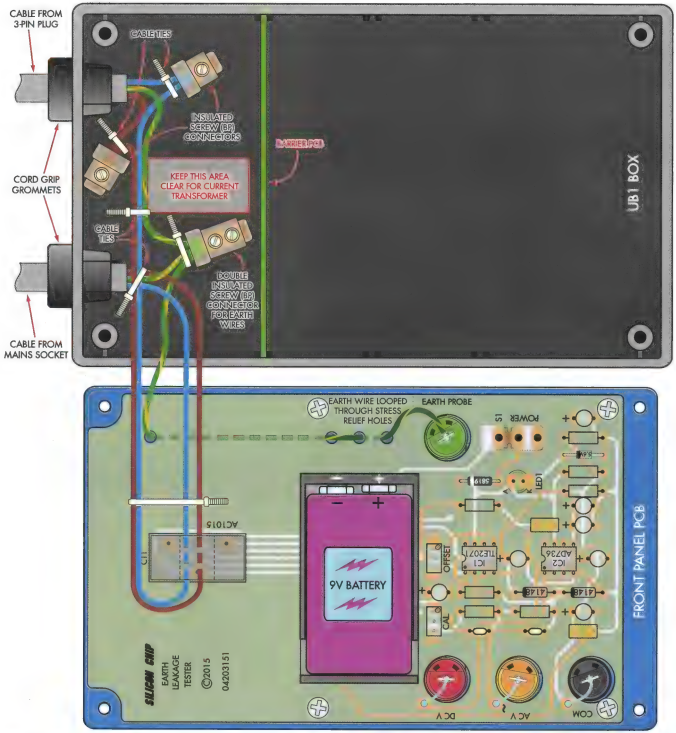

Fig.6: follow this wiring diagram to complete the Appliance Earth Leakage Tester. Make sure that the BP connectors are all securely attached to their respective wires and be sure to use a double-screw BP connector for the Earth leads. Once the wiring is completed, secure the leads with cable ties as shown.

mon and the green for the Earth probe connection.

Now attach four M3 x 15mm tapped spacers to the PCB's mounting holes using M3 x 6mm screws, then fit the front panel in position over switch S1 and secure it in place using four M3 x 6mm screws into the spacers. Once it's secure, push LED1 into its hole in the front panel, then solder it in place.

Next, wind the switch nut up so that it contacts the underside of the front panel, then fit a nut onto the top of the switch and tighten it down. Finally, complete the assembly by soldering wires between the three PC stakes and their adjacent banana sockets, as shown on Figs.4&6.

Preparing the case

The first job with the case preparation is to trim the internal ribs on the ends of the UB1 case, as they prevent the front panel from sitting down

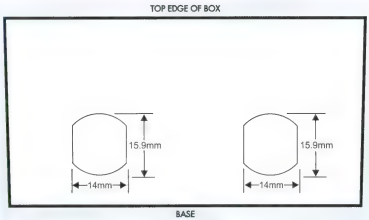

Fig.7: the holes for the two cord-grip grommets must be profiled exactly as shown, to ensure they grip they mains cords securely.

onto the four corner pillars. These ribs can be cut down using sharp side-cutters or a hobby knife. You then need to drill and shape holes for two cord-grip grommets in the top end of box. As shown in the photos and Fig.6, these grommets are used to secure a mains plug lead and a mains socket lead.

It's important that these two holes be shaped so the grommets (and the cords) are securely captured in the panel. Fig.7 shows the hole template and a photocopy of this can be sticky-taped to the box and the hole outlines scribed out with a sharp hobby knife. The two holes can then be drilled, reamed and carefully filed to shape (don't just drill round holes; they will not secure the grommets correctly).

Note: do not use cable glands; the plastic nuts come undone too easily to ensure secure clamping.

Next, cut a 1.5-metre (or longer) mains extension cable in half and strip about 150mm of outer insulation from each end, then feed them through their case holes and clamp them in place using the cord-grip grommets. **Check to make sure that they are securely clamped – it must not be possible to pull the lead out from the grommet.**

Note also that there are different types of cord grip grommet. The most common is only suitable for use with a thin panel (typically aluminium or steel). The grommets specified for the Appliance Earth Leakage Tester are for thicker panel material, in this case 3mm – see parts list for specified type.

Its now just a matter of trimming and stripping the various mains wires, twisting them together and terminating them in BP (blue point) connectors – see Fig.6. **Use one-screw BP connectors for the Active and Neutral leads and a double-screw BP connector for**

Why Not Use A Current Clamp Meter?

An obvious question when making leakage current measurements is why not just use an extension cord that has its Active and Neutral leads separated from the Earth lead, so that a clamp meter can simply measure the differential Active and Neutral current?

Apart from the legalities involved in using a "doctored" extension cord, the problem is that you would need a specialised clamp meter that can measure current down in the mA range with at least 5% accuracy. However, most clamp meters are unsuitable as they are designed for high currents, with typical ranges of 40A and 400A, and have insufficient resolution or accuracy for a 1mA reading (let alone 5% accuracy).

Clamp meters with a 40A range and a 4-digit display have only 10mA resolution, for example.

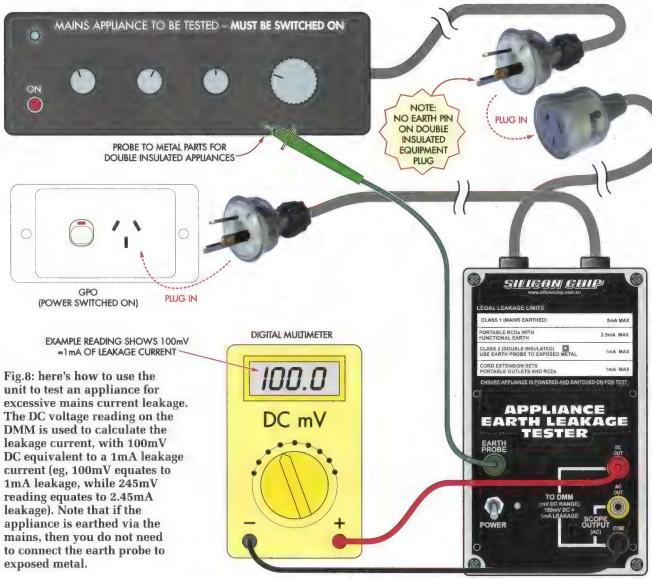

Fig.8: here's how to use the unit to test an appliance for excessive mains current leakage. The DC voltage reading on the DMM is used to calculate the leakage current, with 100mV DC equivalent to a 1mA leakage current (eg, 100mV equates to 1mA leakage, while 245mV reading equates to 2.45mA leakage). Note that if the appliance is earthed via the mains, then you do not need to connect the earth probe to exposed metal.

the Earth wires and make sure that all connections are secure.

As shown in Fig.6, keep the Active & Neutral leads from the plug fairly short and make sure that the three Earth wires are secured by both screws in the double-screw BP connector.

As shown in Fig.6, the Active and Neutral wires from the socket lead are looped through the current transformer (CT1) before going to their respective BP connectors. Note the area that needs to be kept free from any BP connectors, to leave room for the current transformer when the PCB/front panel assembly is fitted in position. Note also that an Earth wire is run from the double-screw BP connector and is looped through strain relief holes in the main PCB and connected to the earth banana socket.

Once the wiring has been completed, slide the 88 x 26mm barrier PCB into the side pillars in the box, as shown in Fig.6. **This barrier isolates the mains wiring from the rest of the (low-voltage) circuitry. Do not leave the barrier PCB out – it's an important safety measure.**

Finally, fit cable ties where indicated to hold the mains wiring together. These will prevent individual wires from moving and possibly coming adrift. The PCB/front panel assembly can then be fitted in place and secured using four corner mount screws. **Be sure to position the Earth BP connector to one side of the current transformer and the Active & Neutral connectors to the other side.**

Testing appliances

When testing appliances, the condition of the mains plug, lead and earth connection should first be checked. Make sure that mains wires are not frayed, repaired with insulation tape, broken or exposed.

Appliances that have metal parts earthed via the mains plug should also initially be checked using a digital multimeter (DMM). The DMM is used to check the resistance between the earth pin on the mains plug and any exposed metal on the appliance and the measured resistance should be 1Ω or less.

Note that before taking any readings, the DMM should be checked for a 0Ω reading with its probes shorted together. If it's not close to 0Ω, then the probe tips, the banana plugs at the ends of the probe leads and the DMM's input sockets may require cleaning. Inserting and removing the banana plugs in the sockets a few times is a good way

Appliance Insulation Tester Or Appliance Earth Leakage Tester: Which One Should Be Used?

There are two types of testers described in the Australian Standards *AS/NZS3760 – In-service Safety Inspection And Testing Of Electrical Equipment*. These are an appliance insulation tester and an appliance earth leakage tester.

We published a suitable insulation tester design last month and this applies a DC voltage (either 250V or 500V) between the Active/Neutral pins and the appliance earth and measures any leakage current flow between them. The problem is that if the device being tested contains relays or solid-state mains switching, the applied voltage may not reach some of the internal circuitry which could possibly have significant earth leakage and thus this test could miss a potentially hazardous fault.

By contrast, this earth leakage tester measures the current flow when 230VAC mains is applied to the unit. Since it is operating normally, any internal switching can be activated and thus mains voltage can reach all of its circuitry and its earth leakage can be checked more thoroughly.

However, the AC waveform peak of around 325V DC is lower than 500V and thus this test may not pick up leakage due to marginal insulation which could cause problems during power surges (eg, in a storm). The peak voltage is also relatively brief so any leakage which occurs only at the highest voltages could be underestimated.

Ideally, you should use both tests to check an appliance and you certainly should do an earth leakage test on any equipment with a remote control or stand-by mode.

Note that in either case, when testing earthed equipment it's necessary to first verify that its earth connection is good, as explained in the text.

Fig.9: using the Appliance Earth Leakage Tester with a scope. In this case, the yellow scope waveform shows the earth current leakage from a double-insulated set-top box.

of cleaning the contacts.

Fig.8 shows how the unit is used to test an appliance. The appliance is plugged into the tester's socket lead, while the tester's mains plug is plugged into a GPO wall socket. The GPO and the appliance itself are then switched on and a DMM used to take the reading.

Note that switching the appliance on may be a multi-step process; if the appliance is in a stand-by mode, the measurement will not be valid as some of the circuitry may not be powered. In many cases, it will be necessary to apply power and then press the on/off pushbutton, either on the unit itself or on its remote control.

The DC voltage reading on the DMM is then used to calculate the leakage current, with 100mV DC equivalent to a 1mA leakage current. So, for example, a 245mV reading equates to a leakage current of 2.45mA.

If the appliance is earthed, then you do not need to connect the earth probe to exposed metal but you must do so for correct readings on double-insulated appliances. Note that some metal parts may be painted or anodised and you may need to scrape away some of the coating so that a proper connection can be made. A case screw is often a good place to make a connection.

Using a scope

The oscilloscope waveform at left shows the earth leakage from a double-insulated set-top box, as measured at the tester's AC output. This set-top box has a switchmode power supply that includes electromagnetic interference (EMI) bypass capacitors that are grounded back to its metal case.

The earth leakage waveform shows the higher-frequency components within the 50Hz envelope and these extend far beyond 20kHz. Note that the leakage is not a sinewave but one that reflects the high crest current flow typical of switchmode power supplies.

We measured the RMS amplitude o this waveform on the scope along with the DC voltage reading (green trace) and they were almost identical. SC

SILICON CHIP ONLINESHOP

PCBs and other hard-to-get components now available direct from the SILICON CHIP ONLINESHOP

NOTE: PCBs from past ~12 months projects only shown here but the SILICON CHIP ONLINESHOP has boards going back to 2001 and beyond. For a complete list of available PCBs, back issues, etc, go to *siliconchip.com.au/shop* Prices are PCBs only, NOT COMPLETE KITS!

MAINS FAN SPEED CONTROLLER	MAY 2014	10104141	$10.00
RGB LED STRIP DRIVER	MAY 2014	16105141	$10.00
HYBRID BENCH SUPPLY	MAY 2014	18104141	$20.00
2-WAY PASSIVE LOUDSPEAKER CROSSOVER	JUN 2014	01205141	$20.00
TOUCHSCREEN AUDIO RECORDER	JUL 2014	01105141	$12.50
THRESHOLD VOLTAGE SWITCH	JUL 2014	19106141	$10.00
MICROMITE ASCII VIDEO TERMINAL	JUL 2014	24107141	$7.50
FREQUENCY COUNTER ADD-ON	JUL 2014	04105141a/b	$15.00
VALVE SOUND SIMULATOR PCB	AUG 2014	01106141	$15.00
VALVE SOUND SIMULATOR FRONT PANEL (BLUE)	AUG 2014	01106142	$10.00
TEMPMASTER MK3	AUG 2014	21108141	$15.00
44-PIN MICROMITE	AUG 2014	24108141	$5.00
OPTO-THERMISTOR MAIN BOARD	SEP 2014	23108141	$15.00
OPTO-THERMISTOR PROXIMITY SENSOR BOARD	SEP 2014	23108142	$5.00
ACTIVE DIFFERENTIAL PROBE BOARDS	SEP 2014	04107141/2	$10/SET
MINI-D AMPLIFIER	SEP 2014	01110141	$5.00
COURTESY LIGHT DELAY	OCT 2014	05109141	$7.50
DIRECT INJECTION (D-I) BOX	OCT 2014	23109141	$5.00
DIGITAL EFFECTS UNIT	OCT 2014	01110131	$15.00
DUAL PHANTOM POWER SUPPLY	NOV 2014	18112141	$10.00
REMOTE MAINS TIMER	NOV 2014	19112141	$10.00
REMOTE MAINS TIMER PANEL/LID (BLUE)	NOV 2014	19112142	$15.00
ONE-CHIP AMPLIFIER	NOV 2014	01109141	$5.00
TDR DONGLE	DEC 2014	04112141	$5.00
MULTISPARK CDI FOR PERFORMANCE VEHICLES	DEC 2014	05112141	$10.00
CURRAWONG STEREO VALVE AMPLIFIER MAIN BOARD	DEC 2014	01111141	$50.00
CURRAWONG REMOTE CONTROL BOARD	DEC 2014	01111144	$5.00
CURRAWONG FRONT & REAR PANELS	DEC 2014	01111142/3	$30.00/set
CURRAWONG CLEAR ACRYLIC COVER	JAN 2015	-	$25.00
ISOLATED HIGH VOLTAGE PROBE	JAN 2015	04108141	$10.00
SPARK ENERGY METER MAIN BOARD	FEB/MAR 2015	05101151	$10.00
SPARK ENERGY ZENER BOARD	FEB/MAR 2015	05101152	$10.00
SPARK ENERGY METER CALIBRATOR BOARD	FEB/MAR 2015	05101153	$5.00
APPLIANCE INSULATION TESTER	APR 2015	04103151	$10.00
APPLIANCE INSULATION TESTER FRONT PANEL	APR 2015	04103152	$10.00
LOW-FREQUENCY DISTORTION ANALYSER	APR 2015	04104151	$5.00
NEW THIS MONTH			
APPLIANCE EARTH LEAKAGE TESTER PCBs (2)	MAY 2015	04203151/2	$15.00
APPLIANCE EARTH LEAKAGE TESTER LID/PANEL	MAY 2015	04203153	$15.00
BALANCED INPUT ATTENUATOR MAIN PCB	MAY 2015	04105151	$15.00
BALANCED INPUT ATTENUATOR FRONT & REAR PANELS	MAY 2015	04105152/3	$30.00
4-OUTPUT UNIVERSAL ADJUSTABLE REGULATOR	MAY 2015	18105151	$5.00

Prices above are for the Printed Circuit Board ONLY – NO COMPONENTS OR INSTRUCTIONS ETC ARE INCLUDED! P&P for PCBS (within Australia): $10 per order (ie, any number)

PRE-PROGRAMMED MICROS

Price for any of these micros is just $15.00 each + $10 p&p per order#

As a service to readers, *SILICON CHIP ONLINESHOP* stocks microcontrollers and microprocessors used in new projects (from 2012 on) and some selected older projects – pre-programmed and ready to fly!

Some micros from copyrighted and/or contributed projects may not be available.

PIC12F675-I/P	UHF Remote Switch (Jan09), Ultrasonic Cleaner (Aug10), Ultrasonic Anti-fouling (Sep10), QuadFrog (Jun12) Do Not Disturb (May13)
PIC16F1507-I/P	IR-to-UHF Converter (Jul13), UHF-to-IR Converter (Jul13)
PIC16F88-E/P	PC Birdies "2 chips – $15 pair" (Aug13) Hi Energy Ignition (Nov/Dec12), Speedo Corrector (Sept13), Auto Headlight Controller (Oct13) 10A 230V Motor Speed Controller (Feb14)
PIC16F88-I/P	Projector Speed (Apr11), Vox (Jun11), Ultrasonic Water Tank Level (Sep11), Quizzical (Oct11) Ultra LD Preamp (Nov11), 10-Channel Remote Control Receiver (Jun13), Revised 10-Channel Remote Control Receiver (Jul13), Nicad/NiMH Burp Charger (Mar14) Remote Mains Timer (Nov14)
PIC16LF88-I/P	Garbage-Reminder (Jan13), Beliboi (Dec13)
PIC16LF88-I/SO	LED Ladybird (Apr13)
PIC16F877A-I/P	6-Digit GPS Clock (May-Jun09), Lab Digital Pot (Jul10) Semtest (Feb-May12)
PIC18F2550-I/SP	Batt Capacity Meter (Jun09), Intelligent Fan Controller (Jul10)
PIC18F4550-I/P	USB Power Monitor (Dec12)
PIC18F4550-I/P	GPS Car Computer (Jan10), GPS Boat Computer (Oct10)
PIC18F14K50	USB MIDIMate (Oct11)
PIC18F14K50	Micromite Mk2 (Jan15) – *also includes FREE 47µF tantalum capacitor*
PIC32MX170F256B-50I/SP	Micromite Mk2 (Jan15) – *also includes FREE 47µF tantalum capacitor*
PIC32MX170F256B-I/SP	Low-Frequency Distortion Analyser (Apr15)
PIC32MX170F256D-50I/PT	44-pin Micromite MK2 (Nov14) with MK2 Firmware at no extra cost)
PIC32MX250F128B-I/SP	GPS Tracker (Nov13) Micromite ASCII Video Terminal (Jul14)
PIC32MX470F512H-I/PT	Stereo Audio Delay/DSP (Nov13), Stereo Echo/Reverb (Feb 14), Digital Effects Unit (Oct14)
dsPIC33FJ128GP802-I/SP	Digital Audio Signal Generator (Mar-May10), Digital Lighting Controller (Oct-Dec10), SportSync (May11), Digital Audio Delay (Dec11) Level (Sep11) Quizzical (Oct11), Ultra-LD Preamp (Nov11), LED Musicolor (Nov12)
dsPIC33FJ64MC802-E/P	Inductor Motor Speed Controller (revised) (Aug13)
dsPIC33FJ256GP506-I/PT	CLASSIC DAC (Feb-May13)
ATTiny861	VVA Thermometer/Thermostat (Mar10), Rudder Position Indicator (Jul11)
ATTiny2313	Remote-Controlled Timer (Aug10)
ATMega48-20AU	Stereo DAC (Sep-Nov09), RGB LED Strip Driver [**-20AU chip**] (May14)

When ordering, be sure to nominate BOTH the micro required AND the project for which it must be programmed.

SPECIALISED COMPONENTS, SHORT-FORM KITS, ETC

P&P: FLAT RATE $10.00 PER ORDER#
PCBs, COMPONENTS ETC MAY BE COMBINED (in one order) FOR $10-PER-ORDER P&P RATE

NEW: BALANCED INPUT ATTENUATOR - all SMD components inc 12 NE5532D ICs, & SMD diodes, SMD caps, polypropylene caps plus all 0.1% resistors (SMD & through-hole) *(May 15)* **$85.00**

APPLIANCE INSULATION TESTER - 600V logic-level Mosfet & 1 kV resistors: *(Apr15)* **$10.00**

ISOLATED HIGH VOLTAGE PROBE - Hard-to-get parts pack: all ICs, 1N5711 diodes, LED, high-voltage capacitors & resistors: *(Jan15)* **$40.00**

CDI – Hard-to-get parts pack: Transformer components (excluding wire), all ICs, Mosfets, UF4007 diodes, 1µF X2 capacitor: *(Dec 14)* **$40.00**

CURRAWONG AMPLIFIER - Hard-to-get parts pack: LM1084T-ADJ, KC5560D, 5 x STX0560, 5 x blue 3mm LEDs, 5 x 39µF 400V low profile capacitors: *(Dec 14)* **$50.00**

ONE-CHIP AMPLIFIER - All SMD parts *(Nov 14)* **$15.00**

DIGITAL EFFECTS UNIT WM8371 DAC IC & SMD Capacitors *(Same components also suit Stereo Echo & Reverb, Feb14 & Dual Channel Audio Delay Nov 14)* *(Oct14)* **$25.00**

AD8038ARZ Video Amplifier ICs (SMD)
For Active Differential Probe - (Pack of 3) *(Sept 14)* **$12.50**

44-PIN MICROMITE Complete kit inc PCB, micro etc *(Aug14)* **$35.00**

MAINS FAN SPEED CONTROLLER - AOT11N60L 600V Mosfet *(May14)* **$5.00**

RGB LED STRIP DRIVER - all SMD parts and BSO150N03 Mosfets, does not include micro (see above) nor parts listed as "optional" *(May14)* **$20.00**

HYBRID BENCH SUPPLY - all SMD parts, 3 x BCM856S & L2/L3 *(May 14)* **$45.00**

USB/RS232C ADAPTOR MCP2200 USB/Serial converter IC *(Apr14)* **$7.50**

NICAD/NIMH BURP CHARGER	*(Mar14)* **$7.50**
1 SPD15P10 P-channel logic Mosfet & 1 IPP230N06L3 N-channel logic Mosfet	
10A 230V AC MOTOR SPEED CONTROLLER	*(Feb14)* **$45.00**
40A IGBT, 30A Fast Recovery Diode, IR2125 Driver and NTC Thermistor	
GPS Tracker MCP16301 SMD regulator IC and 15µH inductor	*(Nov13)* **$5.00**
SMD parts for SiDRADIO	*(Oct13)* **$20.00**
RF Probe All SMD parts Same as LF-HF Upconverter parts but includes 5V relay and BF998 dual-gate Mosfet.	*(Aug13)* **$5.00**
LF-HF Up-converter Omron G5V-1 5V SPDT 5V relay	*(Jun13)* **$2.00**
"LUMP IN COAX" MINI MIXER SMD parts kit: Includes: 2 x OPA4348AID, 1 x BQ2057CSN, 2 x DMP2215L, 1 x BAT54S, 1 x 0.22Ω shunt	*(Jun13)* **$20.00**
LF-HF UP-CONVERTER SMD parts kit: Includes: EXO-HC536R-125 and SA602AD and all SMD passive components	*(Jun13)* **$15.00**
CLASSIC DAC Semi kit – Includes three hard-to-get SMD ICs: CS8416-CZ, CS4398-CZZ and PLL1708DBQ plus an accurate 27MHz crystal and ten 3mm blue LEDs with diffused lenses	*(Feb-May13)* **$45.00**
ISL9V5036P3 IGBT Used in high energy ignition and Jacob's Ladder	*(Nov/Dec12, Feb13)* **$10.00**
2.5GHz Frequency Counter ***LED Kit:*** 3 x 4-digit blue LED displays ***MMC & Choke Kit:*** EMA-2SM+ Wideband MMC and ADCH-80+ Wideband Choke	*(Dec12/Jan13)* **$15.00** **$15.00**

*All items subject to availability. Prices valid for month of magazine issue only. All prices in Australian dollars and included GST where applicable. **# P&P prices are within Australia. Qtties? Please email for a quote***

To Place Your Order:

INTERNET (24/7) *siliconchip.com.au* Shop

PAYPAL (24/7) Use your PayPal account *silicon@siliconchip.com.au*

eMAIL (24/7) *silicon@siliconchip.com.au* with order & credit card details

FAX (24/7) Your order and card details to (02) 9939 2648 with all details

MAIL (24/7) Your order to PO Box 139 Collaroy NSW 2097^

PHONE - (9-4, Mon-Fri) Call (02) 9939 3295 with with order & credit card details

You can also order and pay by cheque/money order (Mail Only). ^ Make cheques payable to Silicon Chip Publications.

YES! You can also order or renew your SILICON CHIP subscription via any of these methods as well!

Home Solar Panel (PV) Electricity:

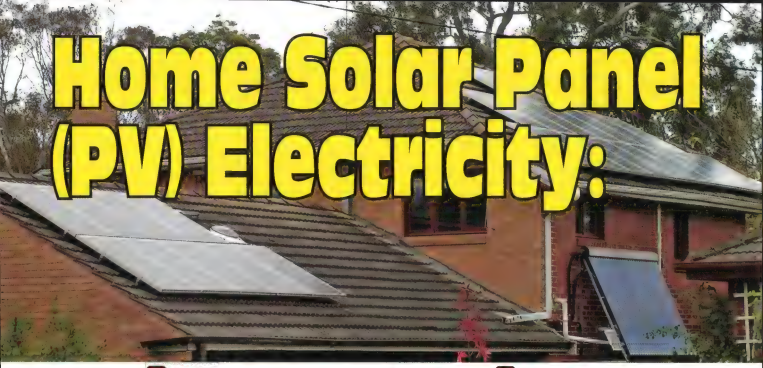

Is it worth it?

By Dr Alan Wilson

In these days of soaring energy prices, generating your own electricty from solar panels on your roof seems like a great idea. But is it? One reader "took the plunge" a few years back and has kept records since. His report might help others make that (quite costly!) decision.

Five years ago I looked into household photovoltaics (PVs) for generating electrical energy and decided the technology, and cost, was then at a point where it was worth considering.

Living in Melbourne, a bit on the marginal side for solar energy, I decided to go for the biggest system I could. Thus, a bit over four and a half years ago I had a 5kW system installed on my roof. This comprises 27 panels and takes up most of the roof space. An inverter is mounted on the side of the house. Apart from an upgrade for the circuit breaker (25A, up from 20A) the system has worked flawlessly.

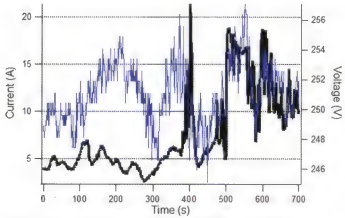

Fig. 1 Current (black) and Voltage (blue) curves for an autumn day with scattered cloud.

Temperature and PV Efficiency

Why was a 20A breaker inadequate? It was an interesting

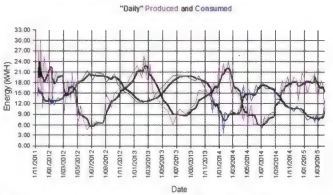

Fig. 2 Daily energy produced (ie, fed back into the power grid - pink) and consumed (blue) as indicated by my smart meter. The black lines are smoothed versions of the same data for clarity.

(Above): the meter box with old style fuses below and smart meter on the left. At the top are the PV circuit breaker/ isolator (left) and then the control block for the hot water system comprising the circuit breaker, timer and timer contactor. The large bare area used to hold two (peak and off-peak) rotating style power meters.

(Right): the inverter and the grid isolation and PV isolation switches. The small wire at the bottom connects to an RS232 port.

(Opposite): the 27 solar panels installed on the north-facing roof, with the evacuated tubes for the solar-assisted hot water on the wall at the bottom right. Shadowing of the lower section of panels starts around 4pm in summer. A single-storey neighbouring house ensures the evacuated tubes are never shaded, even in winter. At the bottom left of the evacuated tubes it is just possible to see the single small solar array which provides power to the controller and water pump.

'fault'. The solar panels worked fine for the first nine months after installation, through winter, spring and summer and then one day in autumn I discovered they were offline.

The circuit breaker had tripped so after checking for obvious causes – and finding none – I simply turned it on and all seemed fine. But it happened again a few days later and then I had my suspicions.

The recent weather had been cold but with patchy cloud and times of quick, bright sun when it broke through gaps

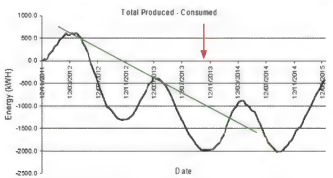

Fig.3: total energy produced less energy consumed. The original downward trend shows net consumption of electricity which has been turned around after the installation of solar assisted hot water in November 2013 (red arrow).

in the cloud cover. So on a similar day I hooked into the RS232 port on the inverter and started logging.

Murphy must have been on vacation because I was lucky first try! As the sun broke through the clouds I obtained a great set of data showing the current peaking above 20A (see Fig.1 opposite).

The problem was due to the temperature dependence of the PV panels. They are more efficient at lower temperature and on a cold day, if the sun bursts through the clouds at full strength, the current can peak above normally expected values before the cells heat up and the efficiency reduces.

I called my installer with data ready and prepared for an argument but was pleasantly surprised when they quickly agreed with my analysis and sent a person around the next day with a replacement 25A breaker.

Since then the breaker has not tripped but on similar days the inverter has temporarily shut down due to excess power generation. The maximum I have ever noticed was 5.3kW on a cool but sunny autumn day. Compare this to my typically observed peak powers of 4kW on hot, cloudless summer days and the effect of temperature on the PV efficiency is very obvious.

First two years

Over the years since installation I have not been 'fanatical' about monitoring the operation of the solar panels and

Evacuated tube solar-assisted hot water

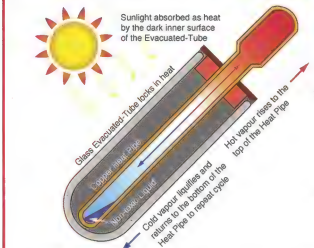

Evacuated tube, solar-assisted hot water consists of a number of evacuated glass tubes which contain a light-absorbing material coated onto a metal structure, which in turn transfers heat to an internal heat pipe. The top of the heat pipe is in a heat exchanger manifold which has the water to be heated circulating through it.

This system is more efficient than the more-well-known flat panel systems and is particularly suited for colder climates where the evacuated tubes largely isolate the heated elements from the environment. Another advantage of the tube construction is the circular geometry automatically 'tracks' the sun.

The system I installed includes thirty 2m-long tubes, a controller, temperature sensors, small PV array and motor. The PV array provides all the power required and the controller is set up to start pumping water when the temperature difference between the manifold and the hot water storage tank exceeds 8° and stop when it falls below 4°.

Even in winter the evacuated tubes make a significant contribution to my hot water heating, shown by the ~2.5kWh drop in the July-August consumption peak in Fig.2 overleaf. In spring and summer they provide all the heating required, corresponding to the close to 4kWh drop in consumption in the January-February period.

have only recorded the energy taken from the grid and energy sent to the grid, as measured by my smart meter, on a roughly weekly basis.

This gives me an indication of how much energy my system is producing and also assures me that all is functioning correctly. Note that this gives no idea of total energy generated since the power I use directly from the panels is not included in these measurements.

Fig.2 shows the energy as a daily production and consumption (obtained by averaging from the previous measurements) with an added smoothed line for each, plotted against the date. When production is greater than consumption, I am winning. Whether I am doing better overall is not obvious from this plot so the second graph, Fig.3, is for the same time but plotted as the total energy produced, less the total consumed. It is now clear that up until December 2013 I was still a net consumer of electricity.

Addition of solar-assisted hot water

I run an all-electric house except for gas hydronic heating. (That's where gas-heated hot water is circulated through the house to heat it).

So, to reduce my electricity use I modified my off-peak electric hot water heater in November 2013 to include Evacuated Tube Solar Assisted Hot Water (see breakout box), shown by the arrow in figs.2 & 3. The 'consumed' graph in fig.2 shows an immediate drop at this point.

The interpolation of the straight line in Fig. 3 through the peaks of the graph shows where the next peak would be expected and it is even clearer that the solar assisted hot water system is giving an immediate pay-back. Of more interest is the final peak for this year which has reversed the downward trend and is indicating I am now a net producer of electricity.

Going 'off-grid'?

There is a significant period of time over the middle months of the year when the production from the 5kW system (plus solar-assisted hot water) falls significantly below consumption.

Going 'off-grid', often promoted as the nirvana of alternative energy, would require a currently impractically large amount of storage capacity to cover this time. The only way to reduce this would be to increase the size of the PV array; eg, the data for July 2014 would indicate a 15kW PV array might just cover the energy requirements for that period.

Of course, some smaller amount of energy storage would still be required for night usage and to cover multiple overcast days. Thus the peak daily consumption of ~18kWh would need to be available from storage for a number of days.

This is much more tractable with 20kWh lithium-based battery packs and built-up modules now readily available, along with indications that costs may fall below US$100/kWh in the next few years. However, installing 80 solar panels on an average suburban rooftop is not feasible, so for the moment, I will remain connected to the grid.

Those pesky blackouts

The electricity supply where I live has been very dependable but just last month a random lightning strike took out a chunk of Melbourne suburbs for more than 20 hours: long enough to prompt me to frantically ship the contents of my freezer to a friend with power.

Why is "anti-islanding" important?

When the electricity grid fails (eg, a blackout or even a brownout) the solar panel array doesn't know that – and keeps on producing power as long as it is being irradiated.

It could therefore be regarded as an "island" in a sea of unpowered electrical lines.

This could be quite dangerous in many ways: (a) anyone working on an apparently "dead" circuit could be electrocuted; (b) without a reference voltage, the system could produce far more voltage than it is designed to handle; (c) conversely, a small solar installation could be trying to power a whole suburb or town so it could be massively overloaded and (d) the inverter may not operate correctly in either case – when there is no grid power or when the grid comes back up.

To prevent islanding, power inverters connected to solar panels almost invariably check for a live grid. If they don't find one, they simply don't start up. (For more information, see "Mailbag" in SILICON CHIP, July 2011 issue, page 8, 9 & 10.)

For this reason, solar panel inverters designed to feed into the electricity grid cannot normally be used as "stand alone" systems which will charge batteries and supply power – for this you need a system designed specifically to be "off grid". And that ain't cheap!

Wouldn't it be nice if a solar PV system could be used to provide power in these circumstances (during the day at least) and avoid this sort of angst?

Unfortunately, grid-connect systems (with no local electrical storage) cannot do this, even if disconnected from the grid (so they are not feebly trying to power up everyone) to only provide power for their own household.

Apart from the anti-islanding feature built into all grid-connected systems (see panel), another problem is one of consistent supply. With variations in sun level due to clouds the power available can vary wildly – from nearly nothing to full supply. Imagine the effect this could have on electrical appliances, particularly electric motors which might try to operate with inadequate power available, possibly drawing large currents but with insufficient voltage to turn over properly. Thus, for safety reasons, grid-connect PVs will not operate in isolation – if they cannot detect the presence of mains (ie, a blackout), they simply shut down.

Conclusions

Even in Melbourne, a 5kW solar panel installation plus solar-assisted hot water (or gas hot water) appears capable of producing more electrical energy than a household uses over a year. This obviously reduces energy bills and also reduces the amount of CO_2 emitted by coal-powered electrical generating plant. Solar panels would be expected to be an even better proposition in more northern and sunnier climes of Australia.

A nice way for future household solar panels to go would be the inclusion of some local energy storage and the capability to operate from this stored source during blackouts. Also, given the currently very low feed-in tariffs available for new installations, it would make sense to store as much locally produced energy and use it before the expensive, grid provided energy. 10kWh of battery storage would cover most of these requirements and with the expected drop in battery storage costs it will become more feasible in the near future. SC

ICOM

IP 100H

Icom Australia has released a revolutionary new IP Advanced Radio System that works over both wireless LAN and IP networks.

The IP Advanced Radio System is easy to set up and use, requiring no license fee or call charges.

To find out more about Icom's IP networking products email **sales@icom.net.au**

WWW.ICOM.NET.AU

ICOM0001

Pro2 wireless weather station WeatherDuino

System designed by Armindo Caneira*
Built and written by Trevor Robinson
*www.meteocercal.info

Constructing the 'RX' (receiver) PCB

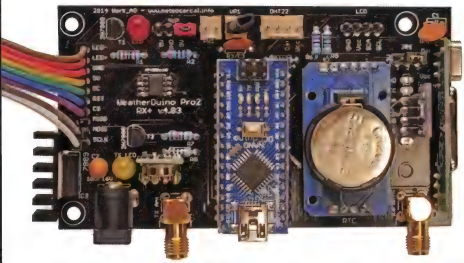

In the last article (May) we built and programmed the TX unit, built the temperature/humidity sensor and discussed suitable wind and rain instruments. This time we're building the receiver (RX) unit – and getting it to send data to the Cumulus software on a PC.

Basically, the RX unit's job is to receive weather data from one or more TX units, processes it and passes it onto the Cumulus software which in turn displays it using one or more Wireless Display units. It emulates either the popular "Davis Vue Pro2" or the "Easyweather.dat" protocols; we are using the Davis Vue Pro2 protocol.

It also gets the computer time sent from the Cumulus software and in turn passes it on to the Wireless Display unit(s) to update their clocks. The RX unit has its own DHT22 temperature/humidity sensor so it will display this data on its screen as well as pass on this data to Cumulus which can display/upload it as "Inside temp".

The RX unit can run one of a few different displays, which are selectable via the software.

The options are:

- 1.8" TFT based on the ST7735 module or
- either a 20x4 or 16x2 alphanumeric LCD with an I²C module.

Having more than one TX unit is handy if you have sensors in different locations. The reverse also applies, where you can use multiple RX units to receive data from one TX and it send it to different computers/software concurrently.

User controls

It doesn't have many – two to be precise!

VP1: one SPST toggle switch sets the run or program mode by switching in/out a pullup capacitor or resistor. Which one you have depends on the version of the serial adaptor chipset – CH340G (capacitor) or FTDI (resistor). The reason for this is the two chipsets have different reset line pullup requirements.

Having the pullup set to **on** (Run) stops the RX unit restarting when the USB is connected. Having it **off** (Program mode) allows the WeatherDuino Pro2 RX firmware to be uploaded to the unit.

PB1: This SPST momentary-action pushbutton switch is the display mode switch. It works in different ways depending on whether the display is an LCD or a TFT type.

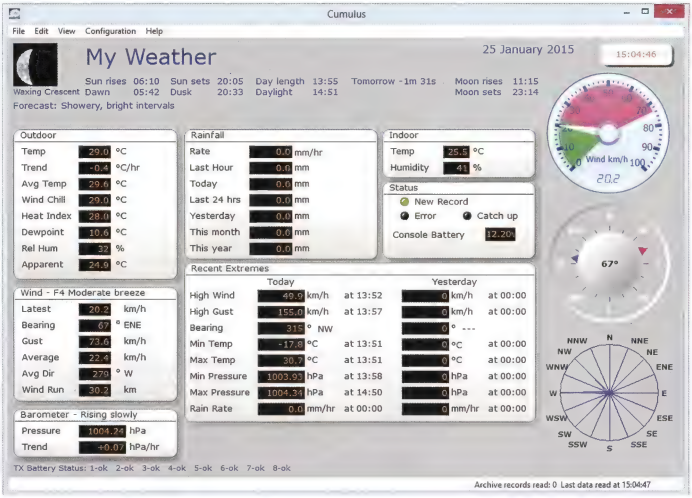

Want a job as a weather forecaster? Everything you ever wanted to know about the weather is available from the WeatherDuino Pro2 and the "Cumulus" software package.

The table below shows its functions.

The information screen shows the firmware version, TX unit voltage and case temperature from the TMP36 sensor.

The LED blinks each time the RX unit sends data to Cumulus.

Construction

Refer to the general construction tips in Part II (last month) if you have any queries.

As usual, start with the lowest profile components first. Where you see the "(s)", this is for the optional components required for the data relay function for the Wireless Display units.

Install all the resistors but note that if you are using the recommended Nano with the CH304G chipset, you need to substitute a 100nF ceramic capacitor for R3 (the location is actually labelled R3/C3).

Next, install the capacitor(s), followed by the LEDs.

When installing the Nano, we suggest using a socket. The USB port faces the side of the PCB. However, if you want to solder direct to the PCB, stagger the soldering the pins to avoid heat build up in one area.

Next to go in are all the headers, PCB pins, jumpers, sockets and RF connector(s), followed by the transistors.

The RTC module, soldered next, should be flat to the board with the battery coin cell holder facing up. If your RTC came with right-angled pins, carefully unsolder them and put them aside (you may need them for the BMP pressure sensor) and solder it in using straight pins.

Next up is the KXD - 10036 RF Transmitter Module (if fitting), then the BMP pressure sensor.

PB1 Operation

Button Action	LCD	TFT
Short press	Nothing	Toggles the Display off/on
Long press	Nothing	Toggles the big font size screen
Double press	Toggles the information screen	

Different mounting holes!

Hopefully you purchased the suggested BMP180 instead of the older BMP085. They both work much the same way but the BMP180 now replaces the older BMP085.

However, they have different pinouts so you MUST solder them onto the PCB in the right positions – with the SLC, SDA, VCC and GND pins aligning with the same points on the PCB (see photos below for the difference).

Both will need right-angled pins (Aha! Now you know

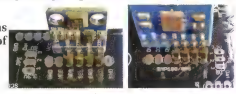

Mounting positions for the two types of pressure sensors: BMP180 on left, BMP085 on right.

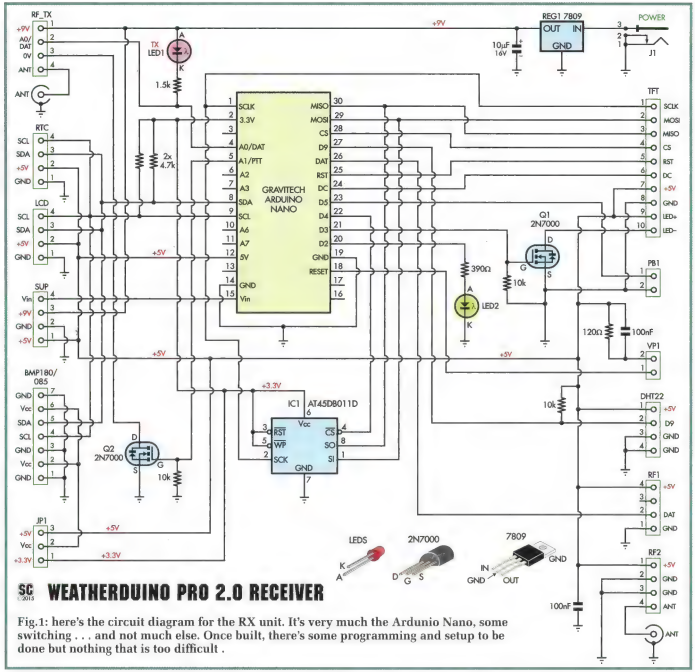

WEATHERDUINO PRO 2.0 RECEIVER

Fig.1: here's the circuit diagram for the RX unit. It's very much the Ardunio Nano, some switching . . . and not much else. Once built, there's some programming and setup to be done but nothing that is too difficult .

why you saved them earlier!). Solder on the right-angled pins and snip off any excess on the opposite side of the PCB.

Double check they fit in the board and the correct pin assignment before soldering them in. The BMP module should be closer to the BX-RM06 module than the RTC module.

Next install the BX-RM06 ASK OOF receiver module, paying attention it is the right way round by double checking the "DAT" pin goes into the "DAT" hole on the PCB.

Next install the 7809 voltage regulator on its heatsink.

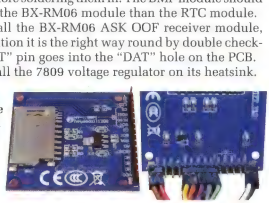

Connections to the remote PCBs are via headers and appropriate header connectors.

Finally, connect you screen of choice (see below), switches. antenna(s) and temperature sensor.

Voltage setting

JP1 (beside the BMP module in the photos) needs to be set for the correct voltage for the BMP module - 5V in our case. The jumper header needs to short out pins 2 and 3, not pins 1 and 2).

Screen connection information

TFT display: Use nine Dupont female-to-female connectors to link the PCB pin headers to TFT pin headers. Currently the SD card and touch overlay are unused.

Alphanumeric LCD: This is simpler as it only uses four wires. You can also use

LCD Pinouts

PCB	LCD
GND	GND
5V	5V
SDA	SDA
SCL	SCL

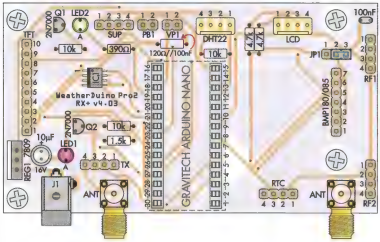

Fig.2: full-sized RX PCB component layout. The blank PCB is shown at right for easy cross-referencing.

four of the Dupont female to female wires to make life easy.

The backlight jumper needs to remain in place, but you may need to tweak the contrast potentiometer.

Connecting the DHT22 temperature sensor

Solder a w-way pin header set to one end of whatever length of cable (up to 5m) you require. Solder and heat-shrink the other end to the four legs of the DHT22 sensor.

Ensure the pin assignment matches the following table.

You should now have a completed RX unit PCB that looks a lot like the photo below.

DHT22 Temp. Sensor

PCB	Schematic Pin	DHT 22 pins
GND	1 (GND)	3 OR 4
DAT	2 (D6)	2
5V	3 (5V)	1

You may have noticed in this photo the RX unit being powered only by the USB connection. You may ask why a 12VDC supply was specified – why not simply run it form the USB (5V) line?

The answer is that basically, the more voltage you supply (within reason!), the higher the signal strength radiated. So, if you want to use the data relay function, you must power the RX unit from 12VDC, to achieve 9V (via the 7809 regulator). This in turn powers both the TX (transmitter) module as well as the Arduino, meaning it takes less power from your PC USB port.

TFT pin assignment

PCB	TFT Display	2.4" TFT - ILI9341 320x240
SCLK	SCLK	SCK
MOSI	SDA	SDI(MOSI)
CS	CS	CS
RST	RESET	RESET
DC	A0	D/C
5V	VCC	VCC
GND	GND	GND
LED+	LED+	LED
LED-	LED-	No connection needed

Configuring and programming the Arduino Nano

It's time to do some code hacking. Only this time you won't get in any trouble for doing so (!).

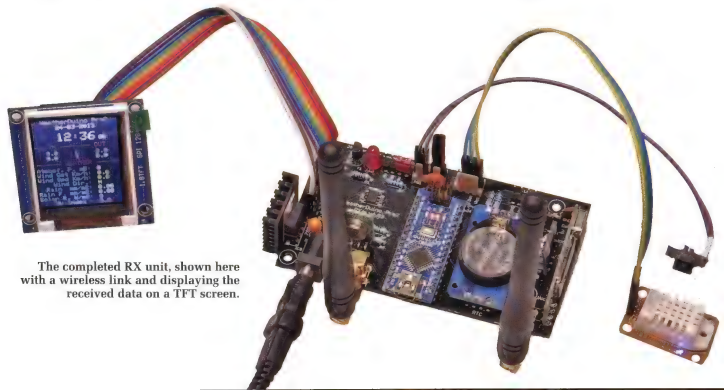

The completed RX unit, shown here with a wireless link and displaying the received data on a TFT screen.

In Part 2 last month, when you programmed the TX unit, you installed everything you need to do this programming.

If you have any trouble with the next steps, please re-read the part 2 instructions on programming the Nano.

Plug the Nano into the same USB port you used to program the TX unit. If all is good the backlight will come on and the Nano's LED will light but not much else will happen.

If you use another USB port the host computer will probably create another COM port. You can check this in the Device Manager if necessary.

Locate the WeatherDuino_Pro2_vXXX_XXXXXXXX folder in your arduino sketch folder. (The "Xs" will change depending on version). If you followed the instructions in part 2, it should be in the \users\your_username\documents\Arduino folder.

Inside that folder there should be three folders. Open the WeatherDuino_RX_vXXX_bXXX and inside that folder should be WeatherDuino_RX_vXXX_bXXX.ino – double click that and it should open in the Arduino IDE.

Make sure it is the file with RX in the filename. You should now see the Arduino IDE with the WeatherDuino Pro2 software open and ready for editing.

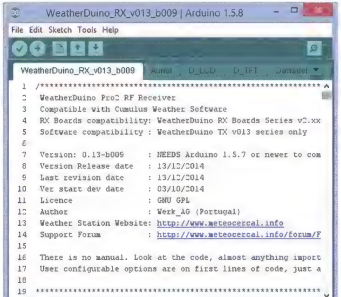

You can drag the sides of the window to make it bigger and see the whole width of the text.

Scroll down to around line 44 to see the section where it says // User configurable options start here.

The "//" (comments) in the lines of code give a good clue to what each setting does. You may need to tweak some (like pressure), but see how it looks after the programming procedure first.

Now we need to configure the following lines to suit your custom configuration.

The **blue** entries below show the variable to be set as it will be called up, while the green entries are examples of what the variables can be (and in our case are) set to.

```
// --- Define your Display type
#define DisplayType   0   // Type 0= TFT, Type 1= LCD
```

If you are using an alphanumeric LCD Screen change it to 1, (otherwise leave it as 0 [zero]):

```
#define DisplayType   1   // Type 0= TFT, Type 1= LCD
```

```
// --- Define TFT Blank timeOut
byte  TFT_BL_Timeout  = 30; // Timeout for TFT backlight
  in minutes (1 to 255). 0 = Always ON
```

This line sets the timer for the screen backlight (which is switched by transistor T1). If you want to manually switch it on and off using the short press of the screen mode button, change the timer to "0". For example;

```
byte  TFT_BL_Timeout  = 0; // Timeout for TFT backlight in
  minutes (1 to 255). 0 = Always ON
```

```
// --- Some Data from your Weather Station location
#define LATITUDE      0 // Put here your Station latitude in
  tenths of degrees north*
#define LONGITUDE     0 // Put here your Station longitude
  in tenths of degrees east
#define ELEVATION     0 // Put here your Station height above
  sea level in metres
```

* As we are in the southern hemisphere, place a "–" (minus) sign before your latitude. If your longitude was west of Greenwich, you would similarly use a – sign.

The Weather Station uses this location data to tell Cumulus where you are, so set it close to your actual location, within reason, but ensure you elevation is correct as it sets the Mean Sea Level pressure correctly.

For the following example, we'll use the location of the Sydney Opera House but set it to yours (unless, of course you are the Phantom of the Opera):

You can get this information from Google Earth.

```
#define LATITUDE -339 // Put here your Station latitude in
  tenths of degrees North
#define LONGITUDE 1512 // Put here your Station longitude
  in tenths of degrees East
#define ELEVATION 7 // Put here your Station height above
  sea level in Meters
```

```
// --- Define Starting Hour of your Meteorological Day
#define MeteoDay_HStart 0 // Use values from 0 to 23
```

The Australian Bureau of Meterology (BOM) uses a day start of 9am, so for consistency we should too.

```
#define MeteoDay_HStart 9 // Use values from 0 to 23
```

```
// --- Define Wind Speed and Wind Gust resolution
#define VP2_WindRes 2 // If set to 2, set Cumulus Wind
  Speed and Wind Gust multipliers to 0.448. Wind Resolu-
  tion 0.72km/h
      // If set to 1, set Cumulus Wind Speed and Wind Gust
multipliers to 0.224. Wind Resolution 0.36km/h
```

```
// WARNING !!! Setting this variable to 1 allows a better wind speed and gust resolution,
// but also limits both of them, to a maximum reading of just 91.8km/h
// This setting only has effect when the software is used in Davis VP2 emulation mode

This one is bit of a trade-off, due to the Davis protocol measuring wind speed resolution to 1 mile per hour.

If you don't expect winds higher than 91.8km/h and want better resolution set to 1 otherwise leave it at 2.

Note that a wind speed of 91.8km/h is *very* high – it corresponds to a "storm" rating (stronger than a gale but less than a hurricane) or a "10" on the Beaufort scale. Such windspeeds on land in Australia are relatively rare.

#define VP2_WindRes 2
// --- Define type of your outside temperature / humidity sensor
#define TH_OutSensor 1 // 0 for SHT21 sensor, 1 for SHT1x or DHT22 sensor,

Only change this if you splashed out and purchased the expensive SHT21 sensor. So leave it as :

#define TH_OutSensor 1  // ---- Defines the source and sensors we want to receive
// ---- If you have all the sensors connect to only one TX board, always select Unit 0

#define TH_OutUnit  0 // 0 for Temp/Hum sensor connected to TX_Unit 0, 1 for Temp/Hum sensor connected to TX_Unit 1
#define WIND_OutUnit 0 // 0 for Wind instruments connected to TX_Unit 0, 1 for TX_Unit 1, 2 for Auriol RF Odometer
#define RAIN_OutUnit 0 // 0 for Rain Gauge connected to TX_Unit 0, 1 for TX_Unit 1, 2 for Auriol RF Rain Gauge
#define SRUV_OutUnit 0 // 0 for Solar Radiation / UV sensors connected to TX_Unit 0, 1 for TX_Unit1
```

You would only change these if you had more than one TX unit, so leave them as they are.

So that's the configuration done. Do a "save as" from the File menu, give it a sensible (and memorable) filename so you know it's your custom configuration.

Check you have VP1 set to off (program mode) to disable the reset pull up and click the right arrow button to upload it to the RX unit. After a minute or so you should see some life. After another little while you should see your inside data, followed briefly after, by the outside data (if your TX unit is operating).

Configuring Cumulus to work with WeatherDuino Pro2

WeatherDuino Pro2 supports the excellent Cumulus software from Sanday Software. However only version 1 is supported at the moment.

Sanday Software have a multi-platform version in beta testing (Cumulus MX) and the WeatherDuino does work in this beta release but it is not yet released for public use, so we won't be covering that version here.

Cumulus can upload to Weatherunderground, your own weather website and a range of other internet services, including Twitter. It also has its own built-in website ready for you to upload to your own web hosting service.

We are only going to cover getting our weather data into Cumulus and displaying it on a Windows PC here - if we tried to write up the Cumulus web info this article would end up bigger than Ben-Hur!

But if you are interested in the Internet-related features, the built in help files have all the information necessary to do it and failing that, the Sanday Software website has a wealth of information and a good FAQ area.

Download Cumulus from here: **http://sandaysoft.com/downloads**. Grab the latest stable build (currently Cumulus 1.9.4 build 1099 at the time of writing). Incidentally, while Cumulus is a free download, we encourage you to donate to the author Steve, in order to keep the software licence-fee free and encourage ongoing development!

You will need the correct Nano serial adaptor driver installed; the same you used in the Arduino IDE.

Right click the CumulusSetup.exe downloaded in the above step, and select "Run as Administrator"

It is recommended you install it in a folder of the root of a drive – eg, C:\Cumulus. That way, system file permissions don't cause problems on modern Windows Operating Systems.

Tick the HTML templates if you want the website template files in the future.

Click next a few times, then the install button.

When it says "finished" and "Launch Cumulus", do so.

The first time it is run, it will take you to the Station Settings page to setup your weather station.

Station settings and settings

We've shown the settings screen grab overleaf. It is important to use the exact Station Settings and Settings shown, as these are what the WeatherDuino Pro2 requires.

It is also important to get the "Units" section correct at first use. If you change the Units later the data will be wrong.

The COM port needs to be set to what the Nano uses (as shown in the Device Manager).

Set "roll the logs over" at 9am.

The other stuff isn't necessary for WeatherDuino to talk to Cumulus but it is for a fully functional weather station. So at least change your location and altitude to suit, as this sets the local daytime Almanac correctly. In the example picture, it is set to the Sydney Opera House.

Your will need to find your yearly rain by yourself. It can be found at the BOM site (choose the location nearest you) or by looking at other weather stations online.

The Cumulus Forecaster

This uses the Zambretti Forecaster method and pressure extremes. From experience, it isn't very accurate and should not be relied upon. If you can "dial in" the pressure extremes you can get reasonably good results but there are better tools for websites, such as BT's Global Sager Weathercaster PHP Scripts For Cumulus.

When your Station Settings agree with the screen grab below (obviously with your local data), click OK. The Software should now start initialising communications with the RX unit.

Calibration settings

Now we need to set the Calibration Settings to match the config in the RX config. Click Configuration at the top

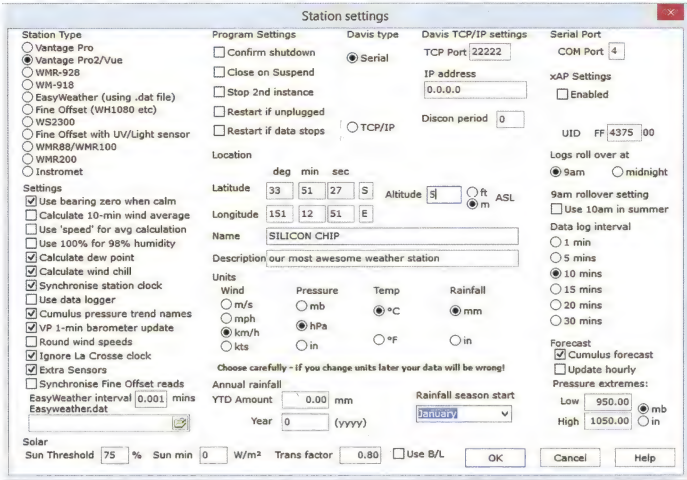

The above screen grab shows our "Station Settings" – yours should look very similar apart from your specific location details. The calibration settings (below) should be identical unless you have specific reason for changing them.

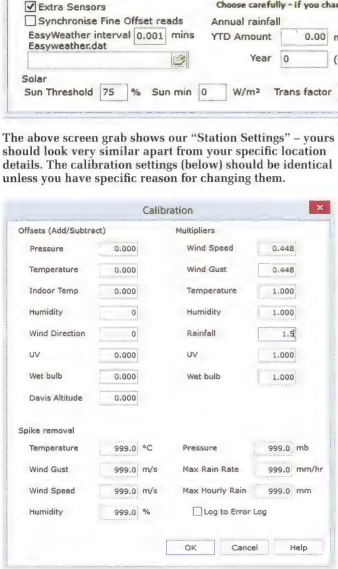

of the window, then Calibration.

When we did the config steps before uploading it to the RX unit, we suggested sticking with the default for the wind multipliers which were:

Default resolution (0.72km/h): Set Wind Speed and Wind Gust Cumulus multipliers to 0.448. Set the calibration multipliers to this as well.

Also set the Rainfall multiplier to 1.5. All the other multipliers should be left at 1.

Your Calibration Setting page should look like the screen grab opposite. Click OK – and you're finished!

The WeatherDuino Pro2 RX should be reporting data to Cumulus.

If you want to see your weather station on the internet, as a minimum you should look at setting up a Weatherunderground station ID and upload data to that. it is easy to do, free and might even kick off the amatuer meteorologist in you.

Notes:

Cumulus should always be run as an Administrator so right click the icon on the desktop or cumulus.exe and select "Run as Administrator" when opening the software.

The RX unit has a USB communication start-up delay built in, to allow the 433MHz link to link up, get data from all sensors and also do some background computations that require some time.

After each reset or power on, it may take up to three minutes before you can start Cumulus (if you launch Cumulus before waiting that time, connection will fail). SC

Design, Build and Use BRING IDEAS TO LIFE

Jaycar Electronics
Better, More Technical

300+ OFFERS FOR REWARDS CARD HOLDERS

NEW

$4.95

Etch Resistant Pen TM-3002

Quick and simple way of making a PCB within seconds! Though waterproof, the ink can be washed off with meths, turps, etc. Blue colour, fine tip approx 0.6mm wide.

NEW

$12.95

Solder Flux Paste NS-3070

Extremely useful when post-soldering cleaning is not possible. This flux paste enables you to produce high quality soldered joints with less solder waste. Non-flammable and non-corrosive. 56g tub.

NEW

NA-1202

FROM $12.95

Anti-Static Protection Lotion

Ideal for soldering or working on ESD sensitive components, this non-greasy lotion protects your hands and body parts from dirt, grease, hazardous chemicals and harsh contaminants. Perfect for mechanical, motor, electrical and industrial jobs.

59ML SQUEEZE BOTTLE NA-1200 **$12.95**
472ML PUMP BOTTLE NA-1202 **$34.95**

NEW

$19.95

Anti-Corrosion Tef-Gel NA-1040

Prevent dissimilar metals from corroding due to galvanic action when fastened together. Also protect electrical terminals/connectors. Anti-seizing, anti-galling and non toxic. 10ml syringe.

DOUBLE POINTS

$24.95

Digital Multimeter Kit KG-9250

Learn everything there is to know about component recognition and basic electronics with this comprehensive kit. Everything you need for the construction of this meter. Included: DMM case, LCD, solder, 9V battery, test leads, PCB, comprehensive 18 page learning manual and electronic components.

- 123 x 67 x 25mm

FREE IC EXTRACTOR FOR REWARDS CARD HOLDERS* TH-1818

TH-1818 VALUED AT $2.95

INTRO OFFER

NEW

$24.95

33-Drawer Parts Cabinet HB-6330

Helps to tidy up your workspace. Includes 32 small drawer each measuring 125(D) x 85(W)mm and one full width pull out drawer. Free standing or wall mountable. Overall 414(H) x 304(W) x 135(D)mm.

Heavy Duty IP67 Digital Multimeter QM-1549

Designed to withstand harsh environments for electrical, industrial and other professional uses. True RMS autoranging.

- Cat IV 600V, 4000 count
- AC/DC voltages up to 1000V
- AC/DC current up to 10A
- Resistance, capacitance, frequency, continuity, diode and more

HUGE RANGE OF DIGITAL MULTIMETERS AVAILABLE.

See online or in-store.

DOUBLE POINTS

$79.95

$39.95

DOUBLE POINTS

Electronic Thermostat Kit

SILICON CHIP AUG '14 KC-5529

This kit is ideal for converting a chest freezer into an energy-efficient fridge, converting a fridge into a wine cooler or controlling heaters in home-brew setups, hatcheries and fish tanks. It controls the fridge/freezer or heater directly via its power cable, so there's no need to modify its internal wiring. Kit includes short-form with silk-screened PCB, 30A SPST relay, temperature sensor with clamp assembly and components.

- PCB: 104 x 80mm

Switchmode Laboratory Power Supplies

Compact size, high current, variable output and fan cooling. Protected against thermal overload and short circuit and will display a warning LED in the event of a fault condition.

0-24VDC 15A MP-3800 **$149**
0-16VDC 25A MP-3802 **$199**

FROM $149

MP-3802

DOUBLE POINTS

SEE OUR NEW & IMPROVED WEBSITE: WWW.JAYCAR.COM.AU

Single Board Mini PC + Arduino = pcDuino!

pcDuino V3.0B is a high performance, cost effective mini PC platform that runs on Ubuntu or Android ICS. With onboard HDMI, USB, SATA, LVDS and Wi-Fi you can use it in robotics, home theatre, electronic control and other various applications. Just have for all beginner to professional electronic inventors!

DUINO V3.0B WITH WI-FI XC-4350
LCD TOUCH SCREEN MONITOR* XC-4356
*Due early May. Call ahead to check stock

NEW

$119 XC-4350

REWARDS CARD OFFER
XC-4350 + XC-4356
$238
SAVE $20

$139 XC-4356

NOW OPEN: SHELLHARBOUR

150 - 152 NEW LAKE ENTRANCE RD
OAKFLATS NSW 2529 PH: (02) 4256 5106

Sale 24 April - 23 May, 2015

To order phone 1800 022 888 or visit www.jaycar.com.au

DIY 3D PRINTER BUNDLE DEAL

VALUED OVER $1180

BUNDLE DEAL INCLUDES:

1 X 3D PRINTER TL-4020 **$999**

Once assembled you can turn 3D digital images into real life plastic objects. A very fast, reliable and precise 3D printer that can print objects with maximum size of 200 x 200 x 200mm, in either ABS or PLA plastics (available separately). This is an advanced level constructional kit, average build time is 3 - 4 days. For more information on assembly and the tools required please visit our website. Extensive online community support is also available at: www.kit2000.eu

**Available in selected stores only. Call ahead to check stock.*

1 X 3D PRINTER CONTROLLER MODULE TL-4022 **$149**

1 X 3D PRINTER LED LIGHT TL-4024 **$34.95**

FREE 1.75mm 3D FILAMENT FOR REWARDS CARD HOLDERS* TL-4060

(valued with purchase of DIY 3D Printer Bundle Deal)

TL-4060 VALUED AT $44.95

BUNDLE DEAL!*

$1049

SAVE OVER $130

DIY BUNDLE DEAL: PCDUINO STARTER KIT

REWARDS CARD OFFER

BUNDLE DEAL!

$184

SAVE OVER $17

REWARDS BUNDLE:

VALUED OVER $200

Convert your ideas into final prototype with this pcDuino Starter Kit that includes the pcDuino V3.0 Nano and other essential accessories at a bargain! The included pcDuino does not include Wi-Fi module and is substantially smaller than its brother (XC-4350). Of course, wired Ethernet is still included at full 10/PS speed. *See website for details.*

BUNDLE DEAL INCLUDES:

PCDUINO V3.0 NANO XC-4352 **$89.95**

2.4GHZ WIRELESS KEYBOARD & MOUSE XC-5174 **$24.95**

USB 2.0 REVERSIBLE 4-PORT HUB XC-4304 **$19.95**

16GB CLASS-10 MICROSD CARD & ADAPTOR XC-4989 **$26.95**

HDMI 1.4 LEAD 3M WV-7916 **$24.95**

1A USB MAINS ADAPTOR FOR PCDUINO MP-3455 **$14.95 EA**

HANDY SENSORS TO BUILD YOUR PROJECTS

$6.95

Laser Diode TO-18

ZD-1955

10mW laser diode component, red in colour and supplied with 7mm diameter collimating lens.

- Operating voltage: 2.4VDC
- Operating current: 40mA

Infrared Receiver 5mm

ZD-1952

Consists of an infrared photo diode and signal processing circuits. Will detect the modulated pulse from an IR remote control and give a TTL level output.

- Operating voltage: 5VDC
- Arrival distance length: 12m
- Horizontal: 42°, vertical: 37°

$6.95

$10.95

ZW-3102

433MHz Wireless Modules

These are pre-built 433MHz wireless transmitter/receiver modules. They feature ASK encoding and are ideal for devices using short data bursts such as remote controls, trigger pulses etc.

- Operating voltage: 5VDC
- Operating current: 10mA

TRANSMITTER ZW-3100 **$10.95**

RECEIVER ZW-3102 **$10.95**

FROM $12.95

ZP-9104

Thermoelectric Peltier Modules

These solid-state devices operate as a heat pump to transfer heat utilising the Peltier effect. Suitable for cooling or heating applications up to 100°C.

- 40 x 40 mm with lead wires
- Vmax (@27°C): 15V

33.4W COOLING POWER ZP-9100 **$12.95**

51.4W COOLING POWER ZP-9102 **$16.95**

68.09W COOLING POWER ZP-9104 **$19.95**

$19.95

Hall Effect Switch HKZ-101

ZD-1900

A rugged Hall effect switch designed for automotive ignition applications. It will sink up to 40mA between the impressive temperature range of -40 to +150°C.

$39.95

Pressure Differential Sensor

ZD1904

This piezo resistive pressure sensor provides a very accurate and linear voltage output directly proportional to the applied pressure.

- 0°C to 85°C temperature compensation
- 0 to 10kPa (0 to 1.45 psi)
- 25mV full scale span

PRECISION ENGINEERED FOR ROBOTICS, REMOTE CONTROL, PCDUINO AND ARDUINO PROJECTS

YG-2602

$7.95

DOUBLE POINTS

Solid Shaft Couplers (Female)

Machining from solid brass stock 16mm long, 12mm diameter. Type I will connect two 6.0mm diameter shafts on a common axis. Type II will reduce from 6.0mm diameter to 4.0mm diameter. Shaft fixed with grub screws.

TYPE I YG-2600 **$7.95**

TYPE II YG-2602 **$7.95**

YG-2738

DOUBLE POINTS

FROM $12.95

12VDC Reversible Gearhead Motors

These high quality DC motors work equally well in forward or reverse motion. *See website for specifications.*

70RPM YG-2732 **$12.95**

36RPM YG-2734 **$19.95**

160RPM YG-2738 **$39.95**

DOUBLE POINTS

$17.95

Mini Servo 4.8V-6V YM-2760

Ideal for R/C or robotics applications where size is at a premium.

- 35(L) x 16.8(W) x 32(H)mm
- Weight: 26g

DOUBLE POINTS

$24.95

Tubular Solenoid 12

SS-0903

High quality push-type solenoid with unit.

- Coil resistance: 25.6Ω

BUILD YOUR OWN ARDUINO ENVIRONMENT MONITOR
TO DETECT TEMPERATURE & HUMIDITY CHANGES

$1.25

Round Tactile Switch
SP-0609
SPST PCB mount tactile switch. 12VDC 50mA.

DOUBLE POINTS

$2.45

100kΩ Trimpot (3296W) RT-4656
25-turn industrial quality sealed trimpot. Pins are in a row, with 2.5mm spacing. Adjustment is vertical. 0.5W rated.

DOUBLE POINTS

$3.95

Buzzer PCB Mount AB-3458
Round shape, extremely durable buzzer. 23.8(dia) x 16(H)mm
- Operating voltage: 3 - 30V DC
- Current Draw: 16mA (max)
- Sound Pressure: 85dB/30cm/12V

DOUBLE POINTS

$3.95 ea

Mixed 10-Piece Jumper Leads
For use in arduino projects, school experiments, or RC and other hobbyist activities. 155mm long.

PLUG TO SOCKET/SOCKET TO SOCKET WC-6021 **$3.95**

PLUG TO PLUG WC-6022 **$3.95**

DOUBLE POINTS

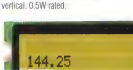

$19.95

16x2 Alphanumeric LCD Module QP-5512
Backlit LCD with SIL connection, suitable for a myriad of uses including Arduino projects.

See website for details.
- 96 inbuilt ASCII characters
- 92 special letters
- 8 custom characters
- 66(W) x 26(H) x 12(D)mm

DOUBLE POINTS

$19.95

Humidity/ Temperature Sensor XC-4246
Measures temperature and relative humidity using a simple interface that requires just three wires to the sensor: GND, power, and data.
- Temperature: -4°C to +125°C (±0.5°C)
- Humidity: 0 to 100% (±2-5%)

DOUBLE POINTS

Component Lead Forming Tool
TH-1810
Get the hole spacing for your resistors and diodes perfect every time. This double-sided tool provides uniform hole spacing from 10 to 38mm. 138mm long.

Note: Components not included.

$7.95

$9.95

LED Tester AA-0274
Check the function, brightness, colour and polarity of all kinds of LEDs. 9V battery required.
- Test currents: 1mA, 2.5mA, 5mA, 10mA, 20mA, 50mA

$29.95

Stainless Cutter/Pliers Set
TH-1812
Set of five 115mm long cutters and pliers for electronics and hobbies use. Stainless steel with soft ergonomic grips. *See website for full contents.*

$119

EtherMega Board
XC-4256
The ultimate network-connected Arduino-compatible board combining ATmega2560 MCU, onboard Ethernet, a USB-serial converter, a microSD card slot, Power-Over-Ethernet support (use XC-4254, sold separately), and an onboard switchmode voltage regulator.

FREE 2GB MICROSD CARD FOR REWARDS CARD HOLDERS XC-4998
(pre-formatted for use with XC-4256)
XC-4998 VALUED AT $7.95

DIY

REWARDS CARD OFFER
BUY ALL 3 FOR $35
SAVE OVER $12

PROTOTYPING ESSENTIALS

FROM $11.95

Bargain Components Packs
Value for money packs of assorted components.
See website for details.

CAPACITOR ELECTROLYTIC 1µF-470µF RE-6250 **$11.95**

RESISTOR 10Ω-1MΩ RR-0680 **$14.95**

TRANSISTOR BC SERIES ZT-2170 **$14.95**

LED 3MM/5MM MIXED COLOURS ZD-1694 **$24.95**

$12.95

Infrared Reflectance Sensor
FOR ARDUINO XC-4261
A pair of IR reflectance sensors mounted on one PCB, spaced just the right distance apart. Use it as a pair or cut/snap it in half to have two separate reflectance sensors.

FROM $9.95

PB-8814

Solderless Breadboards
Two sizes of breadboards to build electronic circuits for your projects without soldering.

300 TERMINAL HOLES PB-8832 **$9.95**

640 TERMINAL HOLES PB-8814 **$19.95**

$12.95

USB Li-Po Charger
FOR ARDUINO XC-4243
Charges 3.7V Li-Po cells from any 5V USB source, USB plug pack, laptop or PC. Input via micro-USB jack. Includes pads to fit 2mm JST connector or 0.1" connector to suit different batteries.

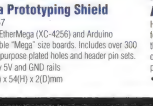

$17.95

Mega Prototyping Shield
XC-4257
Fits the EtherMega (XC-4256) and Arduino compatible "Mega" size boards. Includes over 300 general-purpose plated holes and header pin sets.
- Handy 5V and GND rails
- 82(W) x 54(H) x 2(D)mm

$29.95

RFID Lock Shield
FOR ARDUINO XC-4215
This shield enables your Arduino to control a door lock using an electric strike plate and the commonly available RFID modules.

See website for supported readers.

$22.90

Atmel ATmega162-16PI AVR Microcontroller ZZ-8772
High performance microcontroller engineered for working with compiled C language programs, there is no need for assembly language so you can develop your projects quicker. 40-pin PDIP package.
- 8 bit MCU + 16kB flash memory

NEMA-4 IP65 WATERPROOF SEALED ENCLOSURES

DOUBLE POINTS FOR REWARDS CARD HOLDERS ON OUR RANGE OF PROJECT ENCLOSURES*

Jaycar stocks a comprehensive range of enclosures suitable for professional applications in harsh environments, prototyping or even general utility uses. Excellent value for money! **More than 120 enclosures available. See in-store for details.*

- Sealed lid with recessed neoprene gasket
- Protects against the ingress of moisture and dust

LISTED ARE SOME OF OUR POPULAR SELLERS.

**See website for full range.*

DOUBLE POINTS

FROM **$5.95**

ABS (DARK GREY):

- Operating temperature: -20°C to +80°C
- Lid fixing screws are M4 stainless steel (non-magnetic) into threaded brass inserts
- Some sizes available with flange mount

SMALL 54 x 58 x 35mm HB-6120 **$5.85**
MEDIUM 115 x 65 x 55mm HB-6124 **$9.95**
LARGE 171 x 121 x 80mm HB-6129 **$21.95**
EXTRA LARGE 240 x 160 x 90mm HB-6134 **$37.95**

HB-6216

FROM **$12.95**

DOUBLE POINTS

POLYCARBONATE (LIGHT GREY):

- Operating temperature: -40°C to +125°C
- Lid fixing screws are M4 stainless steel (non-magnetic) into threaded brass inserts
- Some sizes available with flange or clear lid

SMALL 82 x 80 x 55mm HB-6230 **$12.95**
MEDIUM 115 x 90 x 55mm HB-6216 **$14.95**
LARGE 171 x 121 x 80mm HB-6224 **$23.95**
EXTRA LARGE 222 x 146 x 55mm HB-6220 **$29.95**

FROM **$9.95**

DOUBLE POINTS

DIECAST ALUMINIUM (METAL):

- Operating temperature: Up to +400°C
- Screw holes for lid fixing are roll threaded
- Captive recessed lid screws
- Some sizes available with flange mount

SMALL 54 x 58 x 35mm HB-5030 **$9.95**
MEDIUM 115 x 90 x 55mm HB-5042 **$21.95**
LARGE 171 x 121 x 55mm HB-5046 **$34.95**
EXTRA LARGE 222 x 146 x 55mm HB-5050 **$36.95**

DIY BUNDLE DEAL: BUILD YOUR OWN SPY FM TRANSMITTER

DIY

REWARDS CARD OFFER

BUNDLE DEAL! $35 SAVE OVER $12

REWARDS BUNDLE:

VALUED OVER $47

Transmits conversations or sounds to any FM radio with this project. Use it as a spy bug or even as a baby monitor. *Batteries sold separately.*

BUNDLE DEAL INCLUDES:

1 X PCB ETCHING KIT WITH PCB BOARDS HG-9990 **$27.95**
1 X CERAMIC CAPACITOR 60-PIECES PACK RC-5399 **$7.95**
1 X 1/4W RESISTORS 300-PIECES PACK RR-1680 **$6.95**
1 X 6.8-40PF TRIMMER CAPACITOR RV-5718 **$1.45**
2 X ZN3904 NPN TRANSISTORS ZT-2326 **$0.50 EA**
1 X ELECTRET MIC INSERT PCB MOUNT AM-4011 **$2.35**

DOUBLE POINTS FOR REWARDS CARD HOLDERS ON OUR PROJECT ENCLOSURES*

**More than 120 enclosures available. See in-store for details.*

HB-6011

DOUBLE POINTS

FROM **$2.95**

High Quality ABS Jiffy Boxes

Designed for prototyping, all sizes are compliant with industry standards externally and PCB fitting internally. Black colour.

83 X 54 X 31MM HB-6015 **$2.95**
158 X 95 X 53MM HB-6011 **$4.45**
197 X 113 X 63MM HB-6012 **$6.95**

HB-6006

DOUBLE POINTS

FROM **$3.95**

Versatile Snap-Fit ABS Boxes

All boxes features side flanges allowing wall, or even ceiling mount. Snap fit design locks together to enclose your circuitboard or project inside. Black colour.

70.4 X 50.5 X 27.0MM HB-6006 **$3.95**
90.4 X 50.5 X 42.0MM HB-6007 **$4.95**
127 X 70.7 X 50.5MM HB-6009 **$5.45**

DOUBLE POINTS

FROM **$7.95**

Great Value Diecast Aluminium Boxes

Robust, lightweight and easy to drill/machine. Excellent EMI/RFI screening properties. Attractive pricing!

51 X 51 X 32MM HB-5060 **$7.95**
111 X 60 X 30MM HB-5062 **$9.95**
119 X 94 X 57MM HB-5064 **$18.95**

DOUBLE POINTS

$6.95

Mini ABS Instrument Case

HB-5960

Made from high impact ABS plastic, ideal for AV projects, automotive, test gear, etc. Features removable front & rear plastic panels. Rubber feet included. 130(W) x 90(D) x 35(H)mm.

For several years now Jaycar have been writing 'primers' (short technical articles) to help people use our products more easily. For example, learn how to make an FM 'rigs' to improve TV and FM radio reception, how to connect a LED across 240V safely, etc.

TO ACCESS THIS, GO TO www.jaycar.com.au/buyingguides

DOUBLE POINTS

FROM **$13.95**

Ventilated Metal Instrument Cases

Aluminium case finished in grey with black finish steel cover. Supplied with rubber feet.

102 X 150 X 61MM HB-5442 **$13.95**
160 X 184 X 70MM HB-5446 **$19.95**

REWARDS CARD OFFER: 15% OFF OUR RANGE OF VENTILATION FANS & ACCESSORIES*

**More than 35 fans and accessories available. See in-store for details.*

EARN A POINT FOR EVERY DOLLAR SPENT AT ANY JAYCAR COMPANY STORE* & BE REWARDED WITH A $25 REWARDS CASH CARD ONCE YOU REACH 500 POINTS!

Conditions apply. See website for T&Cs.

jaycar REWARDS

REGISTER ONLINE TODAY BY VISITING:

www.jaycar.com.au/rewards

High Quality Axial Ventilation Fans

All fans are ball-bearing type and are built to last with long service life of up to 100,000 hours at 25°C.

- Operating temperature -20°C to +70°C
- Can be mounted on suction or discharge side

SLEEVE-BEARING AND IP55 RATED FANS ALSO AVAILABLE.

See website for details.

FROM **$15.90**

12VDC FANS WITH FLYLEAD:

40MM 3-WIRE XC-5054 **$15.90**
80MM 2-WIRE YX-2513 **$19.95**
120MM 2-WIRE SLIM YX-2518 **$28.95**

240VAC FANS:

80MM 2-WIRE FLYLEAD YX-2508 **$36.95**
120MM SOLDER LUGS YX-2517 **$36.95**
150MM 2-WIRE FLYLEAD YX-2520 **$84.95**

METAL FAN FINGER GUARDS:

80MM YX-2511 **$3.95**
120MM YX-2515 **$4.95**
150MM YX-2525 **$8.95**

IP67/IP65 WATERPROOF SWITCHES

DOUBLE POINTS FOR REWARDS CARD HOLDERS ON OUR RANGE OF PUSHBUTTON AND ROCKER SWITCHES*

Jaycar stocks a great range of high quality electromechanical switches to suit every application and every budget. Our range are so huge that it would be impossible to feature all of them here. So if you are looking for any of these features for your project, talk to us now. *More than 100 switches available. See in-store for details.

- PCB or panel mount switches
- Heavy duty plastic or metal body
- SPST, DPST or DPDT configurations
- Momentary or On/Off action
- Round, square or rectangular bezels
- Black, red, green, blue or metal silver buttons
- Illuminated or non-illuminated LED status
- Terminated with solder lugs or flying leads
- Waterproof, IP56, IP65 or IP67 rated

YOUR ONE-STOP-SHOP! HEAD TO OUR NEW WEBSITE FOR ALL YOUR MECHANICAL SWITCH REQUIREMENTS.

- Index, rotary and toggle switches
- Micro, slide and DIP switches
- Safety, security switches and more!

DOUBLE POINTS

$4.95 ea

SP-0657

PUSHBUTTON SWITCHES

SPST IP67:

- Contact rating: 125mA @125VAC
- Momentary action

BLACK BUTTON SP-0656 **$4.95**

RED BUTTON SP-0657 **$4.95**

DOUBLE POINTS

$14.95 ea

SP-0791

PUSHBUTTON SWITCHES

DPDT IP67:

- Contact rating: 3A @250VAC
- On / Off action
- Illuminating

RED ILLUMINATING SP-0791 **$14.95**

GREEN ILLUMINATING SP-0792 **$14.95**

BLUE ILLUMINATING SP-0793 **$14.95**

DOUBLE POINTS

$12.95

SK-0999

ROCKER SWITCH

SPDT IP65:

- Contact rating: 21A @14VDC
- On / Off / On action
- Illuminating

RED-GREEN ILLUMINATION SK-0999 **$12.95**

DOUBLE POINTS

FROM $6.95

SK-0967

ROCKER SWITCHES

DPDT IP65:

- Contact rating: 6A @250VAC
- On / Off action
- Illuminating (SK-0967)

BLACK BUTTON SK-0966 **$6.95**

RED BUTTON ILLUMINATING SK-0967 **$7.95**

TOP QUALITY CONNECTORS FOR YOUR PROJECTS

FROM $1.25

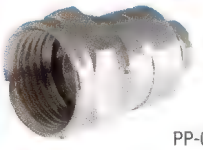

PP-0643

F-59 Crimp Plugs

Commonly used F-plugs for antenna, TV or satellite installations. *H/D = Heavy Duty*

SUITS RG6 CABLE PP-0643 **$1.25**

SUITS RG59U CABLE PP-0644 **$1.25**

H/D, SUITS RG59 CABLE PP-0702 **$1.95**

H/D, SUITS RG6 CABLE PP-0704 **$1.95**

FROM $1.45

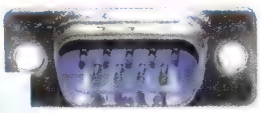

PP-0800

'D' Connectors High Quality

Quality solder-type connectors with gold plated contacts and nickel plated shells.

9-PIN PLUG PP-0800 **$1.45**

9-PIN SOCKET PS-0804 **$1.95**

15-PIN PLUG PP-0820 **$1.95**

15-PIN SOCKET PS-0824 **$1.95**

HM-3142

FROM $2.20

PCB Terminal Blocks

Spring type clamps that retain the wire securely but can be quickly released by depressing a release lever.

2-WAY HM-3140 **$2.20**

3-WAY HM-3142 **$2.90**

FROM $4.95

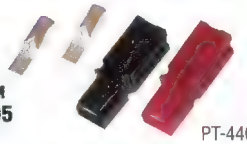

PT-4405

High Current Power Connectors

Used in automotive, marine and aviation. Genderless, stackable for custom configurations.

- 600V rated (AC or DC)
- Sold as a red and black pair

30A PT-4405 **$4.95**

45A PT-4406 **$4.95**

75A PT-4407 **$11.95**

PP-0426

FROM $4.95

Metal Banana Plugs

Gold plated, designed for monster type speaker cable. The hole will accept another banana plug or a thick cable.

RED PP-0426 **$4.95**

BLACK PP-0427 **$4.95**

RED LOCKING PP-0416 **$7.95**

BLACK LOCKING PP-0417 **$7.95**

PP-1052

FROM $6.50

XLR 3-Pin Connectors

High quality XLR line plugs and chassis mount sockets.

LINE PLUG MALE PP-1052 **$6.50**

LINE PLUG FEMALE PS-1062 **$7.95**

CHASSIS SOCKET MALE PP-1058 **$6.95**

CHASSIS SOCKET FEMALE PS-1054 **$7.95**

DIY BUNDLE DEAL: BUILD YOUR OWN COAXIAL LEAD KIT

DIY

REWARDS CARD OFFER

BUNDLE DEAL!

$139

SAVE OVER $28

REWARDS BUNDLE:

VALUED OVER $167

Value for money bundle deal to help you customise the coaxi cable to your preferred length. Cables and F-plugs sold separately.

BUNDLE DEAL INCLUDES:

CAT III INDUCTANCE/CAPACITANCE DMM QM-1548 **$49.95**

COMPRESSION CRIMPING TOOL FOR F-PLUGS TH-1803 **$29.95**

ROTARY COAX STRIPPER TH-1820 **$19.95**

QUICK CHANGE RATCHET CRIMP TOOL TH-2000 **$49.95**

QUICK CHANGE CRIMP TOOL DIES FOR F-PLUGS TH-2005 **$17.95**

DOUBLE POINTS FOR REWARDS CARD HOLDERS ON THESE CABLES*

*Valid for purchase of WB-1706, WB-1708, WB-1712, WB-2002, WB-2009, WH-3057, WH-3079, WH-3087, WM-4502, WM-4504 or WM-4508.

Also available in bulk rolls, Jaycar stocks a wide range of high quality cables and cable management accessories to suit AV, security, networking, automotive or power system installations. *See website for details.

TECH TALK!

We do not sell cheap 3C-2V type TV coaxial cable as its screening is inadequate for acceptable performance IN TODAY'S DIGITAL TV ENVIRONMENT.

WB-1708

FROM 30¢/m

DOUBLE POINTS

ker Figure 8 Cables

MM WB-1706 **$0.80/m**

MM WB-1708 **$0.90/m**

M WB-1712 **$2.50/m**

WB-2002

FROM 90¢/m

DOUBLE POINTS

75 Ohm Coax Cables

RG59 20AWG COAX WB-2002 **$0.90/m**

RG6 18AWG COAX WB-2009 **$1.80/m**

WH-3057

FROM $1.20/m

DOUBLE POINTS

DC Power Cables 2-Core Double Insulated Tinned

7.5A WH-3057 **$1.20/m**

15A WH-3079 **$2.60/m**

25A WH-3087 **$3.80/m**

FROM $1.85/m

DOUBLE POINTS

WM-4502

IDC Ribbons 28AWG 0.05"

16 WAY WM-4502 **$1.85/m**

26 WAY WM-4504 **$2.60/m**

50 WAY WM-4508 **$5.10/m**

OFF-GRID SOLAR BUNDLE DEAL

VALUED OVER $1660

Be it a caravan, motorhome, marine vessel, off grid home, or backup power system, you can now enjoy stand-alone solar power with safe management of almost any combination of DC charge sources and loads.

The included CombiPlus inverter-charger has all the features you need to have full automatic operation of your entire power system. It combines three core functionalities within one unit: a powerful low-frequency pure sine wave inverter, a high power 4-stage battery charger, and a fast action automatic AC transfer switch. With power output guaranteed up to 70°C, it is perfect for Australia's harsh outback conditions.

See website for full specifications.

SOLAR BUNDLE DEAL INCLUDES:

1 X 1500W 12V COMBIPLUS INVERTER-CHARGER	MI-5270†	**$899**
1 X 30A 12/24V MPPT SOLAR REGULATOR	MP-3735	**$249**
2 X 80W 12V MONOCRYSTALLINE SOLAR PANELS	ZM-9097	**$229 EA**
2 X HIGH CURRENT FUSE HOLDERS	SF-1980	**$19.95 EA**
1 X 125A HIGH CURRENT FUSE	SF-1982	**$9.95**
1 X 250A HIGH CURRENT FUSE	SF-1984	**$9.95**

†MI-5270 available in-store only. Not stocked in stores but can be ordered. Call your local store for details.

FREE ULTRA BRIGHT LED TORCH FOR REWARDS CARD HOLDERS* ~~ST-3486~~

ST-3486 VALUED AT $19.95

BUNDLE DEAL! $1549

SAVE OVER $115

DOUBLE POINTS FOR REWARDS CARD HOLDERS ON THESE TOOLS*

*Buy now, online or in-store. See page 8 for details.

Desk-Mount LED Magnifying Lamp

QM-3548 **$99**

Magnify and inspect your projects under the ultra bright LED illumination and precision lens for that clear and strain-free viewing. Being LED, there's no delay in start-up and they'll never need replacing. Metal frame construction.

- 5 dioptre, 127(Dia.)mm lens
- Total extended length: 770mm

ROLLING FLOOR BASE QM-3549 **$89**

REWARDS CARD OFFER

QM-3548 + QM-3549

$168

SAVE $20

DOUBLE POINTS

$29.95

Heavy Duty Wire Stripper/ Cutter/Crimper TH-1827

All-in-one unit designed for easy wire stripping, cutting and crimping, all types of cable from AWG 10-24 gauge (0.13 - 6.0mm).

- Includes wire guide

DOUBLE POINTS

$29.95

150mm Precision Digital Vernier Calipers TD-2082

Features a 5 digit LCD display that will show readings in metric and imperial. It can be zeroed at any point along the scale making comparative measurements easy. Battery included.

- Resolution: 0.01mm/0.0005"

DOUBLE POINTS

$29.95

110-Piece Rotary Tool Set

TD-2451

Drill, saw, sand, polish, carve or grind with this comprehensive rotary tool set.

See website for full contents.

- 12V powered
- Powerful 12,000 RPM

DOUBLE POINTS

$49.95

Cable Tester AA-0405

Simply plug the cable under test and turn the rotary switch. The LEDs gives an instant go/no-go status of each conductor path in the cable. Suitable for any technician working with cables. Requires 1 x 9V battery.

DOUBLE POINTS

CAT III Environment Meter DMM QM-1594

Combines the functions of a sound level meter, light meter, humidity meter and temperature meter to help get the job done faster.

- Cat III 600V, 4000 count
- AC/DC voltages up to 250V
- AC/DC current up to 10A
- Resistance, non-contact voltage

$99

DOUBLE POINTS

$149

Digital Bench Scale QM-7264

Precision 1kg electronic scale with 0.01g resolution. Weighs in grams, ounces, pounds, grains, carats and troy ounces.

- Automatic calibration
- Tare and counting function
- Powered by mains or batteries (not included)

FREE SPARE TIP OF YOUR CHOICE FOR REWARDS CARD HOLDERS*

~~TS-1391, TS-1392, TS-1393 or TS-1394~~

VALUED AT $12.95

$149

60W Lead-Free Soldering Station TS-1390

This is an excellent soldering station suited to both lead-free and ordinary leaded soldering. The iron has a wide temperature range which is microprocessor controlled for precision jobs. Digital LCD display. Mains powered.

- Temperature range 160°C to 480°C
- 130(L) x 170(W) x 240(H)mm

SPARE TIPS:

CONICAL 0.4MM	TS-1391	**$12.95**
CONICAL 1.0MM	TS-1392	**$12.95**
CHISEL 2.0MM	TS-1393	**$12.95**
BEVEL 3.0MM	TS-1394	**$12.95**

MUST HAVE SERVICE AIDS: OUR TOP SELLERS!

$6.95

SAVE $3

Handy Wire Glue

NM-2831 **WAS $9.95**

A conductive adhesive that enables you to make solder-free connections when you aren't able to solder. Lead-free, cures overnight. 9ml tub.

$16.95

SAVE $3

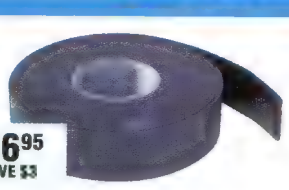

Self Amalgamating Tape

NM-2826 **WAS $19.95**

High quality self fusing Butyl rubber tape that will cure to a single mass when applied to wires, cables, etc. Great for insulating and waterproofing applications. 20mm x 10m roll.

Amazing Contact Cleaner & Rejuvenator

Simple cleaners are often ineffective at cleaning tough oxidation and metal sulfide contamination. This product will not only clean your dirty equipment, but it will als restore and drastically impr performance.

AEROSOL

NS-1434 **WAS $7**

FULL KIT

NS-1436 **WA**

Spea
19/0.1
24/0.20
79/0.20M

To order pho

TOP QUALITY TOOLS, GREAT SAVINGS!

FREE 1L PCB WASH SOLUTION FOR REWARDS CARD HOLDERS* NA-1070
VALUED AT $12.95

$14.95 SAVE $5

INTRO OFFER NEW

12-Piece Car Audio Tool Kit
TH-2339 **WAS $19.95**
Avoid leaving scars on your cars! Designed to fit any car, this ABS pry tool kit is extremely useful for safely removing and installing car audio.

$14.95 SAVE $5

6-Piece Electronic Screwdriver Set
TD-2026 **WAS $19.95**
This set contains all the smaller sizes you need for working on electronic gear. Insulated handles with excellent non-slip grips. 1000V rated.
*See website for full contents.

$54.95 SAVE $5

31-Piece Mini Tap & Die Set
TD-2443 **WAS $59.95**
Consists of 9 metric screw cutting dies and 18 equivalent taps in the same sizes. For the ultra small screws found in electronics.

$149

2.5L 170W Digital Ultrasonic Cleaner YH-5412
Quick and convenient cleaning of industrial parts, electronic equipment and more. Generous 2.5L 304-grade stainless steel bowl and controllable heating element.
- 5 selectable time settings
- 290(W) x 223(D) x 185(H)mm

REWARDS OFFER: 15% OFF THESE WATCH REPAIR TOOLS*
*Valid for selected products shown below. See Page 8 for details or ask us how in stores.

$9.95

Watchmaker's Mallet
TH-1927
Features 6 interchangeable heads: 4 steel ones, a brass one and a acrylic plastic. Ball pein on the opposite end. 185mm long.

$8.95

Watch Case Holder
TH-1934
Adjustable frame with 4 nylon retaining posts to enable a good safe grip on the watch case.
Note: Watch not included.

$29.95

Watch Bracelet Link Removal Pliers TH-1923
Remove and reinstall the fiddly little bracelet pins. It comes with a 1.0mm and 0.8mm pin removal insert.
Note: Watch not included.

$14.95

340-Piece Wrist Strap Spring Bars TH-1928
This is a must have for all DIY watch repairs. A selection of the most common spring bars from women's 6mm to men's 23mm.
See website for full contents.

$14.95

2-Piece Watch Case Opener Set TH-1929
Includes an adjustable opener that engages the little recesses on the back of a watch and a thin double edged knife to get into that tiny groove that some of the older watch covers have.
- Opener adjustable from 6 to 50mm diameter

$24.95

4-Piece Watchmaker's Kit
TH-1932
Kit includes watch case opener/holder, screw-adjustable case retainer with 18 lugs, dusting bulb pump, No.7 tweezers and fine dusting brush. You will be delighted with this set.

DIY BUNDLE DEAL: MOTION ACTIVATED LED LIGHTS

DIY

REWARDS CARD OFFER
BUNDLE DEAL!
$79
SAVE OVER $25

REWARDS BUNDLE:
VALUED OVER $104
Impress your friends as your LED lights automatically light up as they walk past your man cave. An easy to build, efficient and affordable lighting solution.

BUNDLE DEAL INCLUDES:
IP67 LED FLEXIBLE STRIP LIGHT 1M ZD-0579 **$49.95**
12V 7.2AH SLA BATTERY SB-2486 **$29.95**
12V SWITCH CONTROLLER WITH PIR SENSOR ST-3940 **$19.95**
2.1MM POLARITY SENSING DC PLUG WQ-7288 **$4.95**

Subscribe to our YouTube channel JaycarVideo for handy DIY videos.

HANDY REPAIR TOOLS
Jaycar carries a range of extremely handy and quality repair tools to refurbish your gadgets. Great additions to your tool box!

DOUBLE POINTS

$3.95

Eyeglass Repair Tool Kit
TD-2087
Includes unique snap-off screws that can be effortlessly guided into the hole, screw down and snap off. Repairs most eye glasses instantly.

DOUBLE POINTS

$14.95

Repair Tool Kit for iPhone®
TD-2115
This tool kit allows you to disassemble and re-assemble your phone for replacing cracked screens, dead batteries, scratched back panels and more. See website for full contents.
- Suits iPhone® 3G, 3GS, 4, 4s, 5

DOUBLE POINTS

$24.95

Thread Repair Kits
These coil-insert thread repair kits will enable you to drill out a stripped or otherwise damaged thread in a blind hole. 10 inserts included in each kit.

M3 THREADS HP-1600 **$24.95**
M4 THREADS HP-1602 **$24.95**
M5 THREADS HP-1604 **$24.95**
M6 THREADS HP-1606 **$24.95**

Jaycar TRADE CARD

IF YOU'RE A PROFESSIONAL AND REGULARLY PURCHASE ELECTRONICS GOODS FOR BUSINESS PURPOSES, YOU MAY BE ELIGIBLE FOR SPECIAL TRADE PRICES AT JAYCAR COMPANY STORES ON SELECTED ITEMS.
Conditions apply. See website for T&Cs.

VISIT YOUR LOCAL JAYCAR STORE TODAY & FIND OUT HOW.

HOT SPECIALS!

SAVE UP TO $250

STOCK IS LIMITED. ACT NOW TO AVOID DISAPPOINTMENT.

SAVE PRICE 15%

16-Channel Network DVR Kit

WITH 4 HIGH GRADE COLOUR CAMERAS

QV-3038 **WAS $1149**

Ideal kit for anyone in need of serious surveillance or with a large property/area to survey. Up to 12 additional cameras can be added to the 4 high grade 700TVL colour cameras already supplied. 1TB HDD. Our staff can help to recommend cameras best suited to your requirements.

$899

SAVE $250

Asuro Programmable Robot Kit

KR-3120 **WAS $79.95**

Autonomous multi-sensor robot ideal for hobbyists and educational projects. RISC processor robot "brain" featuring two odometers and several display elements.

- Some soldering required
- Recommended for ages 14+

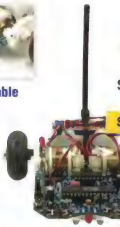

SAVE UP TO 12%

$69.95

SAVE $10

SAVE UP TO 25%

$17.95

SAVE $6

All-In-One Battery Tester

QP-2253 **ORRP $23.95**

Will test many types of batteries including standard AA/AAA/C/D/9V batteries, button cells and lithium batteries. Features a LCD panel that indicates the level of capacity.

Batteries not included.

SAVE UP TO 30%

19-Piece Repair Kit for iPhone®

TD-2113 **ORRP $29.95**

All the tools you need to take apart your iPhone® for DIY repair. *See website for contents.*

$19.95

SAVE $10

SAVE UP TO 30%

$5.95

SAVE $3

Mono Amplifier Module

AA-0373 **ORRP $8.95**

Uses the LM386 audio IC to deliver 0.5W into 8 ohms from a 9V supply. Ideal for all those basic audio projects. It features variable gain, will happily run from 4-9VDC. Only 65mm long.

SAVE UP TO 20%

$27.95

SAVE $7

Frequency Relay Module

FOR CARS

AA-0377 **ORRP $34.95**

A versatile module which can suit a range of different applications. Use it to trigger water spray cooling on deceleration, shift light activation, adjustable aerodynamics based on speed, intake manifold switching and much more.

SAVE UP TO 45%

FROM **$14.95**

SAVE $13

QP-5580

3.5 Digit Panel Meters

Features simple 5VDC operation, auto zero, 10MΩ input impedance, 200mV FSD and automatic polarity. Available in LCD or LED panels.

LCD 12.7MM DIGIT HEIGHT
QP-5570 **ORRP $27.95**
NOW $14.95 SAVE $13

LED 14.2MM DIGIT HEIGHT
QP-5580 **ORRP $29.95**
NOW $16.95 SAVE $13

TERMS AND CONDITIONS: REWARDS CARD HOLDERS FREE GIFT, ½ SAVER DEALS, DOUBLE POINTS & REWARDS OFFERS Instore offers may vary. Rewards Card membership is always required. Refer to website for Rewards Card T&Cs. **DOUBLE POINTS FOR REWARDS CARD HOLDERS** In the purchase of specified product lines only. **SELECTED RANGE OFFER FOR REWARDS CARD HOLDERS DOUBLE POINTS & 10% OFF (in PAIRS)** 4 AA Battery Powered Product Purchases. Switches (Pushbutton & Rocker), Toggle Switches & Accessories (not Irregulars) for full details. **DOUBLE POINTS ACCRUED** during the promotions period will be allocated to the Rewards Card you have registered at purchase. **PRICE CHANGES** may occur in between publication & sale. **1 Hour 20% SAVINGS OFF ORIGINAL RRP (ORRP).**

Australian Capital Territory

Belconnen	Ph (02) 6253 5700
Fyshwick	Ph (02) 6239 1801

New South Wales

Albury	Ph (02) 6021 6788
Alexandria	Ph (02) 9699 4699
Bankstown	Ph (02) 9709 2822
Blacktown	Ph (02) 9678 9669
Bondi Junction	Ph (02) 9369 3699
Brookvale	Ph (02) 9905 4130
Campbelltown	Ph (02) 4625 0775
Castle Hill	Ph (02) 9634 4470
Coffs Harbour	Ph (02) 6651 5238
Croydon	Ph (02) 9799 0402
Dubbo	Ph (02) 6881 6778
Erina	Ph (02) 4365 3433
Fairy Meadow	Ph (02) 4225 0960
Gore Hill	Ph (02) 9439 4799
Hornsby	Ph (02) 9476 6277
Liverpool WE ARE MOVING	Ph (02) 9824 3100
Maitland	Ph (02) 4934 4911
Mona Vale OPENING SOON	Ph (02) 9979 1711
Newcastle	Ph (02) 4968 4722
Penrith	Ph (02) 4721 8337
Port Macquarie	Ph (02) 6581 4476
Rydalmere	Ph (02) 8832 3100
Shellharbour NEW	Ph (02) 4202 5105
Smithfield	Ph (02) 9604 7411
Sydney City	Ph (02) 9267 1614
Tamworth	Ph (02) 9531 7033
Tuggerah	Ph (02) 4353 5016
Tweed Heads	Ph (07) 5524 6566
Wagga Wagga	Ph (02) 6931 1033
Warriews Bay	Ph (02) 4954 8100
Wollongong	Ph (02) 4225 7089

Queensland

Aspley	Ph (07) 3863 0099
Browns Plains	Ph (07) 3800 0877
Caboolture	Ph (07) 5432 3152
Cairns	Ph (07) 4041 6747
Caloundra	Ph (07) 5491 1000
Capalaba	Ph (07) 3245 2014
Ipswich WE ARE MOVING	Ph (07) 3202 5800
Labrador	Ph (07) 5527 4295
Mackay	Ph (07) 4953 0611
Maroochydore	Ph (07) 5479 3511
Mermaid Beach	Ph (07) 5526 6722
Nth Rockhampton	Ph (07) 4926 4155
Townsville	Ph (07) 4772 5022
Strathpine	Ph (07) 3880 6910
Underwood	Ph (07) 3841 4184
Woolloongabba	Ph (07) 3393 0777

Victoria

Cheltenham	Ph (03) 9585 5011
Geelong	Ph (03) 5284 1811
Fernter Gully	Ph (03) 9756 5000
Frankston	Ph (03) 9781 4100
Geelong	Ph (03) 5221 5800
Hallam	Ph (03) 9796 4577
Kew East	Ph (03) 9859 6188
Melbourne City	Ph (03) 9663 2030
Mornington	Ph (03) 5976 1311
Ringwood	Ph (03) 9870 9063
Roxburgh Park	Ph (03) 8339 2042
Shepparton	Ph (03) 5822 4037
Springvale	Ph (03) 9547 1022
Sunshine	Ph (03) 9310 8066
Thomastown	Ph (03) 9463 3333
Werribee	Ph (03) 9741 8851

South Australia

Adelaide	Ph (08) 8231 7355
Clovelly Park	Ph (08) 8276 6901
Elizabeth	Ph (08) 8255 6999
Gepps Cross	Ph (08) 8262 3200
Modbury	Ph (08) 8265 7511
Reynella	Ph (08) 8387 3847

Western Australia

Bunbury NEW	Ph (08) 9721 2858
Joondalup	Ph (08) 9301 0916
Maddington	Ph (08) 9493 4300
Mandurah	Ph (08) 9586 3827
Midland	Ph (08) 9250 8200
Northbridge	Ph (08) 9328 6252
Osborne Park	Ph (08) 9444 0250
Rockingham	Ph (08) 9592 8000

Tasmania

Hobart	Ph (03) 6272 9955
Launceston	Ph (03) 6334 2777

Northern Territory

Darwin	Ph (08) 8948 4043

Jaycar Electronics

Better. More Technical!

YOUR LOCAL JAYCAR STORE

Free Call Orders: 1800 022 888

HEAD OFFICE

320 Victoria Road, Rydalmere NSW 2116
Ph: (02) 8832 3100
Fax: (02) 8832 3169

ONLINE ORDERS

Website: www.jaycar.com.au
Email: techstore@jaycar.com.au

Occasionally there are discontinued items advertised on a special / lower price in this promotional flyer that has limited to nil stock in certain stores, including Jaycar Authorised Stockist. These stores may not have stock of these items and can not order or transfer stock.

Arrival dates of new products in this flyer were confirmed at the time of print but delays sometimes occur. Please ring your local store to check stock details. Savings off Original RRP. Prices and special offers are valid from 24 April - 29 May, 2015.

PRODUCT SHOWCASE

New Tektronix RF Vector Signal Generators

Tektronix claim their new TSG4100A series are "simply the best vector signal generators on the market."

With mid-range performance and entry-level RF signal generator price, they feature true DC to 2, 4 or 6GHz range with analog and basic digital/vector generation. Software upgradable, their advanced vector modulation standards cover GSM, EDGE, W-CDMA, APCO-25, TETRA and more. Amplitude accuracy is ±0.3dB and frequency resolution is 1μHz!

The 5.6kg unit is 2U high and half standard rack width and supports GPIB, LAN, USB and RS-232 interaces.

With a three-year warranty, the Tektronix TSG4100A2, A4 and A6 are available through Vicom Australia.

Contact:
Vicom Australia Pty Ltd
1064 Centre Rd, Oakleigh Sth, Vic 3167
Tel: (03) 9575 0118 **Fax:** (03) 9579 7255
Website: www.vicom.com.au

Italian FIAM batteries now available from RS components

RS Components now has available a range of attractively-priced Italian FIAMM lead-acid batteries, having established a new direct agreement with the manufacturer.

The FIAMM range in stock now at RS comprises 23 models offering customers a selection of 6V and 12V batteries, in a range of sizes and with capacity from 1.2Ah to 70Ah, optimised for a discharge profile of 15 minutes to 20 hours, for emergency lighting, security alarms or UPS.

Contact:
RS Components Pty Ltd
25 Pavesi St, Smithfield NSW 2164
Tel: 1300 656 636
Website: www.au.rs-online.com

WHAT? Someone has swiped your EMONA Short-form Catalog?

FREE with this issue all subscribers should have received a 16-page EMONA short-form catalog. If you didn't get yours (or if it's been stolen already!) DON'T PANIC!

Simply log onto www.emona.com.au/shortform and you can download another copy . . . FREE!

Tiny RF signal generator/RF power detector/scalar network analyser

The Windfreak SynthNV is a 34.4MHz to 4.4GHz software-tunable RF signal generator controlled and powered by a Windows PC via its USB port.

It includes an on-board 70dB RF power detector which can be used with the sweep function as a scalar RF Network Analyser.

RF power is settable in 1/2dB steps up to +17dBm, adjustable over a 60dB range. It is extremely small in size, offers high performance and low price.

The SynthNV has unique amplitude, sweep and pulse modulation capability that has made it very popular with military and police EW applications. But it is equally at home used as a high quality local oscillator driving a mixer in a microwave communication system or test signal generation in your ATE setup. It will pulse modulate the output – ideal for testing to the MIL-STD-461 and DO-160 standards.

There is no need to stay tethered to the computer. The SynthNV has non-volatile on-board memory so it can be programmed to fire up by itself on any frequency, power or modulation setting. This makes for a highly mobile, low power and light weight RF signal generation solution.

Contact:
Clarke & Severn Electronics
4/8A Kookaburra Rd, Hornsby NSW 2077
Tel: (02) 9482 1944 **Fax:** (02) 9482 1309
Website: www.clarke.com.au

SERVICEMAN'S LOG

What let the magic smoke out?

Dave Thompson*

Sometimes when it comes to diagnosing faults in electronic equipment, you just have to follow your nose – especially if the smoke has escaped. I recently had a very smelly PC come into the workshop but my initial snap diagnosis was well wide of the mark.

Items Covered This Month

- PC with burnt motherboard
- Lenovo T61 laptop repairs

*Dave Thompson runs PC Anytime in Christchurch, NZ.
Website: www.pcanytime.co.nz
Email: dave@pcanytime.co.nz

There's an old saying that electronic components must run on magic smoke because if the smoke leaks out, the component stops working – or something to that effect. As with all such sayings, there are several variations on the theme. I heard a similar adage back in the day when I was just starting out as an avionics engineering apprentice; one of the wise old wags asked me what I reckoned the propellers on an aircraft were for.

Since I'd already fallen victim to several workplace shenanigans – the most dubious of which resulted in me dangling from a hoist in the rafters of a hanger while my "workmates" went off clutching their sides with laughter to morning tea (or "smoko", as it was called) – I cautiously confessed I didn't know what the propellers were for. "They're there to keep the pilots cool", was his reply, "if you stop them, the pilots start sweating!"

An obvious gag

It was an obvious gag when I thought about it and the following year, when I was one step further up the ladder towards becoming a real engineer, I carried on the tradition by relating the same routine to a few of the new guys. Of course, I embellished it somewhat and made it a lot funnier than the way it was told to me!

I'm guessing that every industry has similar factory-floor jokes that the old hands like to play on those further down the chain. Some are common to many workshops, such as the new boy being tasked with going and asking for some non-existent item (such as a lefthanded screwdriver or a can of tartan paint) – and of course they look like a fool for having done so. Other so-called "fools' errands" I've heard of include asking for a calibrated G-clamp (a micrometer), a metric crescent (or shifter in Australia), a long weight (which turns out to be a long wait), a glass hammer, an AC battery or a brass magnet.

I was once personally tasked with going to the tool store to get some "prop wash", which everyone got a good laugh out of. There are many more along the same lines but hopefully it doesn't surprise anyone reading this that electronic components do not run on magic smoke and nor do they require it to enable them to work; it's a myth!

I first heard the smoke joke many years ago and had long forgotten it until by sheer coincidence, I encountered it several times within a few days in various forums I lurk in online. And although it was used in varying contexts, it stuck in my mind because it coincided with a smoke-related job that came through the workshop at about the same time.

By the way, it's no surprise that I read it in those particular online forums because they all relate to valve amplification and these types of projects tend to deal with very high voltage power supplies. Generally speaking, if a component is designed for a maximum working voltage of, say, 12V and it suddenly gets exposed to 350V, smoke really does leak out. I've seen it on several occasions!

But smoke isn't restricted solely to high-voltage, coal-burning amplifiers. It might be more prevalent in such devices when things go wrong but I've seen it in plenty of low-voltage situations too.

As an example, a customer recently turned up at my workshop with a computer that, going by the smell, must have suffered some kind of power "event". I'm sure anyone who has worked with electronics for any length of time will recognise the peculiarly acrid fragrance to which I am referring; nothing else smells quite like toasted electronic components. It tends to be a mixture of burnt fibreglass, plastics, enamels, nitrates, ceramics and other compounds that make up "that smell".

My compact workshop

Now as anyone who has seen my temporary workshop can attest, it isn't very large. I have a grand total floor space of 10 square metres which, no matter how you work it out, is seriously small. On this particular day, there was a slight breeze and as the sliding door at the front of the workshop was open, I actually smelled this machine before the guy carrying it up the driveway came into view.

Because the smell was so strong, I had him stop outside and set it down in the middle of the driveway rather than have it stink out my office. And that's where I decided to examine it.

Based on the smell alone, I assumed that the power supply must have burnt out as this is usually the culprit when a machine smells like this. In the past, I've even had power supplies that rattled when given a bit of a shake, due to the remains of various blown com-

ponents floating around the metal enclosure.

In this instance though, the machine didn't make any unusual sounds when I gave it a gentle shake and nor did it exhibit any of the usual carbon or smoke residue around the vents – or, at least, none that I could see without pulling the power supply out of the machine. But the fact remained that it did reek, so the smoke had definitely escaped from something somewhere.

As is usual with any kind of troubleshooting, determining what was going on at the time of the fault can go a long way towards figuring out what the problem is. In this case, a chat with the customer soon revealed that his kids had turned the machine on to do their homework and after a minute or two, it had gone "pop" and there was a bit of a flash from the rear of the machine. After that, the whole thing went dark, with no lights or fan noise coming from the box and pushing the power button on the front of the case did nothing at all.

It has to be the supply

Give any serviceman those particular clues and you'll likely get a diagnosis of a blown power supply. That's certainly the conclusion I came to but since I'd have to confirm this in order to provide an estimate of the repair costs, I carried the machine into my workshop and cleared a space on the bench for it. And that's not as easy as it sounds, considering the size of my workbench these days!

Anyway, with the machine on the bench, I undid the two thumb-screws holding the side of the case to the chassis and slid it clear, putting it out of the way under the bench where I would probably trip over it later (10 square metres, remember?). The smell was even stronger inside the workshop with the side panel removed and it would no doubt now permeate through everything. However, all my test gear was in the workshop, So I didn't really have any choice.

The first thing I needed to do was find my power supply tester and this wasn't going to be easy either. Since I'd moved all my workshop gear from a 160 square metre, multi-level workshop to my new container-sized shop, every possible surface is about three tools deep (and that's in the "shallowest" places). I've been working from this cabin for about a year now and the place still looks like a grenade has gone off inside it; at least I can tell people it looks like a "busy" workshop!

I eventually found the tester and set about unplugging the power supply

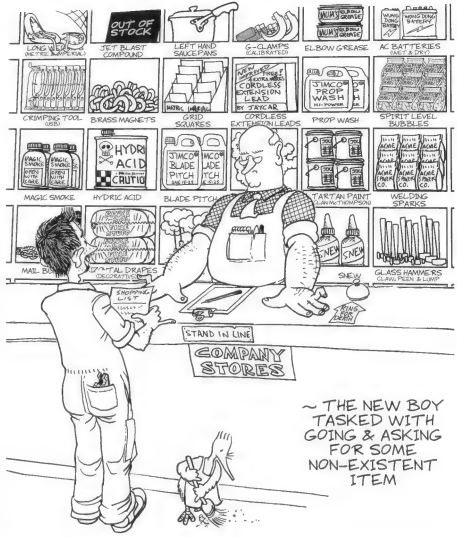

Prototype to High Volume - ONE STOP SHOP

PCB Manufacturing from 24 Hrs.

PCB Assembly from 3 Days

All lead times are Ex-Factory

Rigid • Flex • Metal Core PCB

Component Sourcing • Stencil

PCB, Cable & Box Assembly

Testing • IC Programming

$ Cheapest Price 24 x 7 Support

QualiEco Circuits Pty Ltd.

1300-BUY PCB
(1300 289 722)
+61 3 9111 1887
pcb@qualiecocircuits.com.au
www.qualiecocircuits.com.au

Proudly serving Australasia since 2003

Best Quality • Lowest Price • Reliable Lead Time

NOW AS ANYONE WHO HAS SEEN MY TEMPORARY WORKSHOP CAN ATTEST, IT ISN'T VERY LARGE

leads from the motherboard. For those who haven't seen how the power supply connects to a motherboard, there are usually two main power leads to consider. One is a 20-pin or 24-pin (in more modern motherboards) connector and the other a 4-pin or 8-pin connector supplying 12V to another part of the board.

The main plug carries ±12V, 5.5V and 3.3V lines, some of which may or may not be used, and connects various signal cables to the board to control the likes of fans, thermal sensors and power control lines. This plug usually has a plastic release clamp on the side which much be pressed quite hard in order to remove the harness. Some are very tough to remove, with the collective grip of 24 significantly-sized pins also holding it all in and the plastic clamp sometimes just flexes rather than disengages from the socket's grasp.

In this instance, it was so tight I initially thought it might have "welded" itself in. However, on inspection, I could see no obvious melting or blackening around the socket so I persevered with some carefully calibrated and applied brute strength. I say "carefully" because many motherboards are not sufficiently supported near the power plug and it would be all too easy to crack or even snap part of the board clean off if one were too hamfisted.

I also avoid using "pry-type" tools (like the tip of a screwdriver). In the first place, the amount of access usually prevents getting any type of lever into the right position and secondly, it would be all too easy to slip and gouge the board with the tip. And that's something I wouldn't want to have to explain to the client, who was still standing there watching the "professional" at work.

Eventually, by wiggling the plug from side to side and applying a lot of upward force while applying opposite down-force to the sides of the socket with my other hand, I eventually managed to get the plug clear without tearing anything out. The 4-pin 12V plug was much easier to remove and I soon had them both clear and ready to connect to my tester.

The tester itself is a simple enough tool that is powered by the power supply under test – in fact, an excellent indicator of a failed power supply is a failure to even turn the tester on!

Joking aside, a good power supply plugged into the tester results in the fans on the power supply spooling up and a row of LEDs on one side of the tester being illuminated. These LEDs correspond to the different voltages that should be present so if they all light up, things are looking good.

Sockets for all the usual types of supply connectors found in a modern computer are mounted around the other edges of the tester. These include older-style Molex sockets for the likes of IDE hard drives and optical drives, plus sockets for the new SATA-style power plugs and even one for deprecated floppy disk power connectors.

Basically, the idea is that there is one of each of these sockets present for each type of connector likely to be present in the average computer. Typically, there are one or two of each type in each bundle of wires exiting from the average power supply and when plugged into the tester, their corresponding LED should illuminate.

Theoretically, if all the LEDs light, then you have a good power supply. And I say "theoretically" because in rare cases, this has proven not to be true. Over the years, I have encountered several power supplies that tested OK using this piece of equipment yet wouldn't power a computer under load and this is one feature missing from this particular tester. If the tester could provide some kind of load, then those faulty power supplies would have been shown up for what they were instead of providing a false positive.

Now before all you pedants out there fire up your email programs for some good, old-fashioned flaming, I know there are these types of power supply testers are out there. However, as long as I am aware of the limitations of this one and take that into account, then I am happy to continue using it.

It's not the power supply

Anyway, I plugged this smelly computer's power supply into the tester, expecting to see no lights at all. It would, I thought, quickly prove to the client that my dead power supply diagnosis was spot on. In fact, I had been so sure of the verdict that I'd been talking up the dead power supply angle and the possible cost consequences ahead of time.

You can imagine my surprise then when the power supply and case fans (which were still connected) burst into life as soon as the tester was connected. And to add to my embarrassment, a solid line of power indicator LEDs immediately lit up on the tester, indicating that all was well. In fact, I was so surprised I actually jumped a lit-

tle; at worst I was expecting a bit more smoke to come out and perhaps even a dramatic "bang". I certainly wasn't ready for the thing to start up as normal and light up all the LEDs on the tester!

After some professional backpedalling (I think I covered myself OK), I reminded the client that while the power supply might test OK on the tester, it wasn't a true test as to its serviceability. I also told him that if it had suffered any type of power "event", it might pay not to trust it and due to the relatively low cost of a replacement it would be worth swapping it out for a new one. Either way, I'd have to do further tests to see exactly what we were dealing with and so with the job book duly filled out and the client on his merry way, I got down to finding out what was really going on with this machine.

The first thing I needed was a good light so I got out my trusty LED desklamp, cleared a space for it and swung it into place over the side of the machine. And there, staring me in the face, was the evidence I had been looking for – a severely burned area on the motherboard around where the front panel headers joined the board.

The affected area was about the size of a playing card and included the BIOS battery holder and dozens of surface-mount components. How I'd missed this before, even without the light, was beyond me because a hole had even burned right through the board. Two of the front panel USB header plugs had fused to their motherboard sockets and a quick glance at the front USB connectors confirmed my suspicions; their gold pins were bent askew and had shorted to the outside of the connector, causing the wires to fuse together and the board to melt.

My guess is that the tongue had broken off from the socket and the next time a flash drive was inserted, it had deformed the now-vulnerable pins and the damage was done. The kids hadn't mentioned that part to dad but that's likely what happened. In the end, a new case, motherboard and power supply was my recommendation and once those bits were swapped out, everything was fine and the client was happy.

The smell remains

Despite quickly disposing of the burnt motherboard, it took some time for the smell to finally dissipate from my workshop. It will stay that way until next time some magic smoke escapes from a faulty piece of gear.

Servicing Stories Wanted

Do you have any good servicing stories that you would like to share in The Serviceman column in Silicon Chip? If so, why not send those stories in to us? In doesn't matter what the story is about as long as it's in some way related to the electronics or electrical industries, to computers or even to car electronics.

We pay for all contributions published but please note that your material must be original. Send your contribution by email to: editor@siliconchip.com.au

Please be sure to include your full name and address details.

Lenovo T61 laptops

Heat-guns and laptops don't usually go well together but A. P. of Toowoomba, Qld applied more than a little heat in an attempt to repair some faulty laptop computers. Here's his story . . .

Doing repair stuff for yourself or your family is different to doing repairs for paying customers. In the latter case, you need to be sure that the repair is as permanent as possible. After all, you really shouldn't be charging customers for experimental repair techniques.

These thoughts were prompted by an unusual repair technique I used recently. It may have been a bit crude but I had nothing to lose.

The problem started with my Lenovo T61 laptop. It had worked flawlessly for about two years, having been purchased secondhand on eBay. Then, one morning, I turned it on and was greeted by a completely blank display and a 'long-short-short' beep tone.

Since this was the main computer from which I ran my business, I didn't want to mess around with what was probably a motherboard fault. So instead of attempting to fix it I simply replaced it with a slightly-used Lenovo T400 that I acquired inexpensively, again on eBay. When it arrived, I simply swapped the hard drive from the faulty T61 to the T400, a process that took only a few minutes.

Since the T400 is essentially a rebadged T61, it booted straight into Windows 7 as soon as it was powered on. I then spent some time updating the display driver to suit the T400's display adapter. I also kept the T61 for spare parts, since my son Angus had a nearly identical model. It turned out to be a wise move.

Recently, I was sitting with my son when he turned on his T61 laptop and found that the display was blank. However, this seemed to be a different fault than the one that had struck down my own T61. In this case, there was no beeping and it was clear that the backlight was working. However, all the display pixels were 'black'.

The first thing I did was plug in a VGA monitor. This immediately displayed the Windows desktop, suggesting that the CPU and GPU were both functioning. The monitor also allowed me to shut down the laptop in an orderly fashion via the Start menu, rather than just pushing and holding the power button which would have been the only option if I was still 'flying blind'.

So it looked like the fault was either in the LCD's connecting cable or in the LCD panel itself. My first step, because it was relatively easy to do, was to check that the LCD cable was properly seated on the motherboard.

I began by dismantling the laptop to obtain access. This involves removing the battery, then a number of screws from the base of the laptop to free the wrist rest (with the trackpad), the keyboard and the keyboard bezel. A few plastic clips then need to be freed around the edges of the keyboard bezel and the wrist rest, after which three internal screws are removed so that the keyboard bezel can be lifted out.

The "ThinkPad T61, R61 and R61i (14.1-inch widescreen) Hardware Maintenance Manual" (available free from the Lenovo website) clearly shows all the steps. It even details the torque to be used to tighten each screw upon reassembly.

Removing three more screws frees the WiFi card and a bracket that ensures that the LCD cable doesn't pop off its connector. I then pulled the LCD cable off its motherboard connector and reinserted it, hoping that that would clear the fault.

It was now necessary to power the laptop up to see if the fault was still evident, so I plugged in the keyboard (which has the power button at the top) and the power adaptor. I pressed

The area around the GPU chip was covered with metal foil and the chip heated with a hot-air gun to reflow the solder under it.

the power button and the BIOS splash screen came up less than four seconds later, so I quickly pulled out the power adaptor to prevent the machine from booting up.

I reassembled the machine and tried it again. It was still working but I couldn't say for sure that it had been fixed permanently since the problem could be an intermittent fault that was lurking elsewhere. However, there wasn't any point doing anything else at this stage without testing it, so I returned the laptop to my son with the clear message that it could fail again.

I didn't have long to wait. Less than 24 hours later, the laptop was showing the same symptoms. It looked like the fault really was in either in the LCD cable or the LCD panel itself. It also looked like the fault was intermittent and reseating the cable had possibly disturbed things enough for it to temporarily come good.

Since I was pretty sure that my own T61 had failed due to a motherboard fault, its LCD panel and cable were probably good. So, this time, I swapped the complete lid assemblies between the two T61 laptops. This required removing only four more screws from each laptop and neatly avoided having to remove the LCD bezels.

That fixed the problem and I expected that it would now stay fixed. I was quickly proved wrong. Two weeks later, I was sitting with Angus again when he shut down the T61 by pressing and holding the power button. I was a bit shocked that he hadn't used the Start menu to shut the laptop down and patiently explained all the things that could go wrong if you don't let a computer shut down gracefully. And as if to prove my point, when he powered the laptop up again shortly afterwards, the screen was blank.

I had some reverse explaining to do this time, because Angus really thought that he might have broken the laptop by not shutting it down correctly. I told him that it was simply coincidence. I also told him that even if using the power button to shut down had caused a software glitch, there was no way it could affect what the screen displayed when the BIOS splash screen was meant to come up.

My T61 had never had a blank screen issue prior to the demise of its motherboard. The fact that it was now blank indicated that the fault lay on the motherboard in my son's T61, rather than in the LCD panel itself or its cable.

In spite of my suspicion about the motherboard, I was still hoping for a quick fix. What's more, Angus indicated a preference to have his original display back, since its backlight was a lot brighter than the backlight used in the display from my laptop. As a result, I swapped the display panels back again and sure enough, by the same magical process that had fixed the fault before, the original panel was now working. However, this time the "repair" lasted only a few hours.

I then found an identical model laptop on eBay. It was missing its RAM and hard drive but I bought it anyway. My plan was to migrate the hard drive and RAM from Angus' machine to this "new" laptop. Unfortunately, when it arrived, I quickly discovered that it too was suffering from a blank display.

But there was even worse news – when I connected a monitor to the VGA port, it just showed "No signal". So the logical conclusion was that the original RAM and hard drive had been removed because the machine had developed a fault!

Despite this, the machine was now clearly booting up, as indicated by a flashing hard drive activity light. This pointed the finger firmly at a GPU fault and it dawned on me that I now had three almost-identical faulty machines, all with Nvidia NVS 140M GPUs. And with the benefit of 20:20 hindsight, all faults could be attributed to the GPU.

At this point, I hit the web to see if I could find out more about this problem. In my case, it had occurred in three out of three T61 laptops so there just had to more information as to the nature of this fault "out there".

First, I found that the long-short-short beep code that my T61 had exhibited was associated with GPU failure. I then discovered that some Nvidia laptop GPUs made between 2007 and 2008 (when all three laptops were manufactured) had been found to fail prematurely. This had resulted in some manufacturers repairing affected laptops for free outside their warranty period.

I also discovered that some people had successfully repaired laptops with Nvidia GPU faults by heating the motherboard sufficiently to reflow the solder "bumps" connecting the GPU chip to its substrate. The methods of heating the motherboard varied – some removed the motherboard from the chassis and put it in an oven (resting it on balls of aluminium foil), while others used a heat-gun to target the GPU chip itself.

With nothing to lose except time, I decided to have a go at repairing at least one of the laptops by re-flowing its GPU solder connections. But which method should I use?

The oven method appeared reasonable (if risky) but it would be a lot of work to completely remove the motherboard from the case. With that in mind, the heat-gun method stood out as the best compromise: the motherboard could stay in the bottom part of the case and although there was the possibility of causing collateral stress damage by heating only part of the motherboard, I hadn't seen any postings online with warnings like, "Yo, this killed my motherboard!".

I chose to first try the last T61 I'd purchased on eBay. First, I removed

the battery, keyboard, wrist rest (with touchpad), RAM, hard drive, DVD drive, the speakers, the CMOS/RTC battery, the WiFi/bluetooth/modem daughter cards, the display and the heatsink/fan assembly. I didn't bother to remove the CPU, even though it was socketed. What was left was the motherboard attached to the base, partially overlaid by the laptop's skeletal midframe. There was still heavy-duty black film stuck to various places, including on the substrate surrounding the GPU die but apparently this could take the heat without trouble, so I left it in place.

Next, I tore off a piece of aluminium kitchen foil large enough to cover the laptop's carcass and cut a rectangular hole in it to expose the GPU chip. With my heat-gun on the lowest of its two settings, I then gently warmed the laptop's carcass all over from a distance of about 20cm for about a minute.

The idea behind this was two-fold. First, heating the whole thing reduces the chances of solder joints breaking due to uneven thermal expansion of the circuit board. And second, I was trying to approximate the ideal temperature profile for reflow soldering of the GPU, which includes an initial gentle temperature rise to help evaporate any moisture that has found its way into the chip.

After this pre-heating, I placed the laptop carcass on the bench and covered it with the foil, lining up the rectangular hole so that just the GPU was exposed. I then held the heat-gun, still on its low setting, about 25mm from the GPU, moving it in very small circles for about 30 seconds. After that, it was just a matter of waiting about five minutes for everything to cool down before I commenced reassembly.

In order to test the unit, I installed just the heatsink, display, RAM, keyboard and power adaptor. When the BIOS splash screen appeared shortly after I pressed the power button, I knew I hadn't completely messed up. I then fully reassembled the laptop and handed it back to Angus for stress testing. It didn't last long; it was back on the bench 34 hours later with Angus saying that it had been freezing at random moments.

Maybe I hadn't used enough heat to completely melt the solder bumps? I decided to do the same thing with my old T61 but this time I held the heat-gun over the GPU for a full minute. Once again, this appeared to fix the problem so I gave this unit to Angus for stress testing, telling him that "If it lasts a week I'll swap your bright display back".

~COOKING YOUR LAPTOP

This time Angus reported that the laptop was sometimes showing "Fan error" on start-up but this problem would usually clear itself with a second attempt at starting up. But then, on the fourth day, the screen went blank and stayed that way. When I subsequently plugged a monitor into the VGA output and pressed the power button, the BIOS screen came up but it was garbled and flickering.

I repeated the heat treatment but this time I held the heat-gun over the GPU for a full two minutes. At about 90 seconds, the black plastic on the GPU substrate began to change shape and I feared that it might pull off some of the SMD components that it covered. However, my attitude was now one of "nothing ventured, nothing gained", so I stuck it out for the full 120 seconds.

Once again, the repair was successful and it has now lasted three weeks. However, Angus says that the machine still displays a "Fan error" message during about 50% of start-up attempts. Because of this, I suspect that I have only bought slightly more time with the extended heat treatment.

If it fails again, I might do the job properly and replace the GPU.

Editor's note: the heat-gun technique described above is really a matter of last resort, when there's nothing to lose. As the author indicates, a heat-gun is not ideal for the job because of the risk of damage to adjacent parts and a hot-air rework tool would be a better choice if available. SC

Introduction to PCBs

Printed Circuit Boards (PCBs) are typically made from fibreglass material laminated with copper. The copper is etched to form tracks and pads which, together with components, form the circuit.

Through hole and SMD components

"Through hole" components have their leads passed through holes and are soldered to the other side of the PCB. "Surface mount" devices are components are mounted and soldered onto one side of the board.

Below are the various types of PCB in common use:

Rigid PCBs

Rigid PCBs are divided into three categories: single layer (or single sided), double layer (or double sided) and multi-layer.

Single Layer/Sided PCB

These PCBs have the components mounted on one side of the board and the conductor/track pattern is on the other side. Because there is only one conductor pattern, no tracks can cross and they have to be routed around each other.

Double Layer/Sided PCB

These are better suited to complex circuits as they have twice the area for the conductor pattern. Having two separate conductor/track patterns inevitably requires electrical connections between the two sides of the board.

These 'bridges' are called 'vias' – simply a hole in the PCB that is filled or plated with metal and thereby connects the conductor pattern on both sides.

Multi-Layer PCB

Multilayer PCBs have one or more conductor patterns *inside* the board, to greatly increase the area available for wiring. This is achieved by gluing several double-sided circuit boards together, with insulating layers in between. Most multi-layer boards have between four and ten layers(including the two outer layers) but PCBs with almost 100 layers can be made.

Brought to you by the technical team at

QualiEco Circuits Pty Ltd.

pcb@qualiecocircuits.com.au

By JIM ROWE

A 2-Channel Balanced In For Audio Analysers & Di

This project is designed to extend the measurement capabilities of low-cost USB test instruments like the QA400 Stereo Audio Analyser or the USB DSOs we reviewed recently. It provides balanced/differential inputs for each channel in addition to unbalanced inputs, combined with three attenuation/measurement ranges: 1:1, 10:1 and 100:1.

BACK IN MARCH, we reviewed the QuantAsylum QA400 low-cost USB Stereo Audio Analyser and we were most impressed with its performance capabilities. Yet at the same time we were disappointed with two limitations, which restricted its practical applications quite severely.

One limitation was a maximum input level of only 1.41VRMS/4.00V peak-peak for both input channels. That makes it fairly useless for a lot measurements; you would have to use external input attenuators if the QA400 were to be used for making useful measurements on hifi, guitar and PA amplifiers.

The QA400 also only provided unbalanced inputs, whereas you need balanced inputs in order to efficiently test professional audio equipment. Bal-

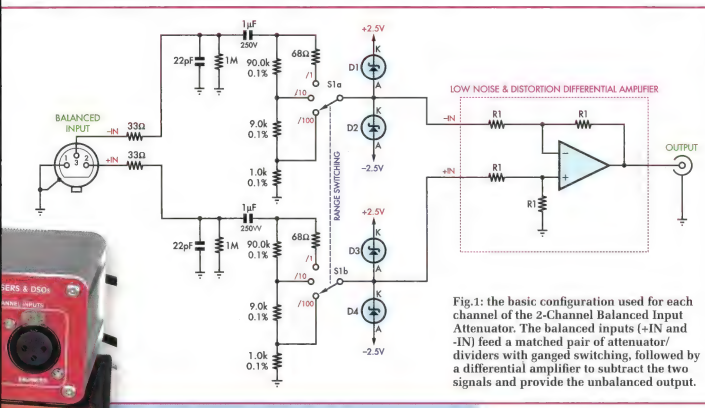

Fig.1: the basic configuration used for each channel of the 2-Channel Balanced Input Attenuator. The balanced inputs (+IN and -IN) feed a matched pair of attenuator/dividers with ganged switching, followed by a differential amplifier to subtract the two signals and provide the unbalanced output.

Left: the 2-Channel Balanced Input Attenuator is built into a case that's almost exactly the same size as QuantAsylum's QA400 Stereo Audio Analyser, so that the two can be stacked together.

put Attenuator gital Scopes

anced or differential inputs also allow instruments like the QA400 to be used to make accurate measurements on signals at the output of bridge-mode analog amplifiers or class-D digital amplifiers where neither side of the outputs is earthed.

As a result, we realised that the applications of instruments like the QA400 could be greatly expanded by designing an "outboard" 2-channel input attenuator to allow measurements at significantly higher audio power levels, combined with balanced/differential inputs for each channel in addition to unbalanced inputs.

Such a project is not restricted to enhancing audio analysers like the QA400, either. Many, if not most, low-cost USB DSOs have similar limitations, and would therefore benefit in the same way. And we should also mention the Digital Audio Millivoltmeter described in the March 2009 issue of Silicon Chip, which had similar limitations.

Finally, we should also mention that this project would make a useful addition to any oscilloscope when you need differential inputs, albeit its bandwidth does limit its use to signals with harmonics no higher than 750kHz (eg, square-wave signals to about 75kHz) – see specifications panel

So you can see the design concept is quite straightforward but producing a design which was "good enough" turned out to be a real challenge. This was largely because of the need to introduce as little additional noise and distortion as possible, because this would detract from the excellent performance of the QA400.

Basic configuration

Fig.1 shows the basic configuration for one channel: balanced inputs (+IN and -IN) feeding a matched pair of attenuator/dividers with ganged switching, followed by a differential amplifier to subtract the two signals and provide the unbalanced output.

Don't worry about the circuitry shown inside the differential amplifier at present – we'll move onto that shortly. Just note that the purpose of Schottky diode pairs D1/D2 and D3/D4 at each input of the differential amplifier are to limit the signal levels to within windows between ±2.7V, to protect both the differential amplifier and the input of a following instrument, such as the QA400.

The 68Ω resistors in series with the "/1" position of switches S1a & S1b are there to limit the current in these diodes, together with the 33Ω resistors in series with each input.

Ideally we'd like to make these series resistors somewhat larger than

The front panel carries two 3-pin XLR sockets for the balanced inputs, two BNC sockets for unbalanced inputs and the range selector switch.

101Ω (= 33Ω + 68Ω), because the diodes we're using for D1-D4 have a fairly low maximum current rating. However, we are forced to compromise at the values shown because these resistors are directly in series with the inputs when S1 is switched to the 1:1 range. This means that their thermal (Johnson) noise is added directly to the input signals, thus degrading the attenuator's noise performance.

As set out later in an accompanying panel, the thermal noise generated in a resistor is directly proportional to the square root of its resistance multiplied by the absolute temperature and the bandwidth being used. This means that if we were to increase the value of the input series resistors to, say, 1kΩ, the RMS thermal noise voltage at each input of the differential amplifier would rise from 186.79nV (-134.6dBV) to 587.6nV (-124.6dBV), measured at 25°C and over the band from 20Hz to 21.0kHz.

In other words, the noise level at each input would be degraded by some 10dB.

Note that since the two sources of thermal noise are not correlated, the output noise level of the differential amplifier would be degraded by a further 6dB even if the amplifier itself was totally noiseless. So with the resistor values shown in Fig.1, the RMS output noise level will always be above 373nV (-128.6dBV), while if the input resistors were increased to 1kΩ it would always be above 1.175μV (-118.6dBV).

Those 33Ω resistors in series with each input are mainly to form low-pass filters in conjunction with the 22pF shunt capacitors, to improve the RFI/EMI rejection of the overall circuit. You'll find that in the final circuit we have also fitted small inductors in series with the 33Ω resistors, to further improve EMI rejection.

The 1μF coupling capacitors on each input reject any DC that may be present, while having minimal effect on the low frequency response. And the 1MΩ shunt resistors on the input side of the capacitors are to bleed away any charge remaining on those capacitors when the inputs are disconnected from a source of DC.

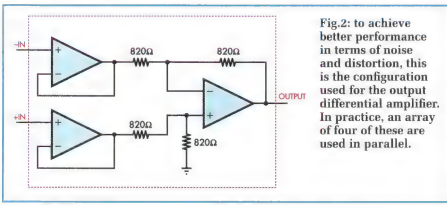

Fig.2: to achieve better performance in terms of noise and distortion, this is the configuration used for the output differential amplifier. In practice, an array of four of these are used in parallel.

Finding the right amplifier(s)

Let us now consider the crucial aspect of the project's design: how to achieve the best noise and distortion performance from the output differential amplifier section (shown inside the dashed rectangle of Fig.1). In other words, which is the best op amp to use and what is the best configuration to use it in?

We began by searching through all the data we could find on low noise, low distortion op amps. Initially, this led us to the Analog Devices AD797, a device with particularly impressive noise and distortion specs: 1.2nV/√(Hz) maximum input voltage noise density between about 80Hz and beyond 10MHz, coupled with a typical THD figure of -120dB at 20kHz.

However when we looked closely at the performance of the AD797 when used as a differential amplifier, we found that its noise performance wasn't as good: the output voltage noise spectral density jumped up to around 9nV/√(Hz), giving an RMS noise output of close to 1.3μV (-117.5dBV) over the 20Hz – 21kHz audio bandwidth.

Even to achieve this level of performance, the resistor values shown as R1 in Fig.1 had to be lowered to 1kΩ, making it very difficult to achieve a total input resistance of more than 2kΩ

on the 1:1 range of S1. This obviously wasn't high enough, suggesting that voltage follower/buffers were going to be needed ahead of the differential amplifier.

There was one more drawback regarding the AD797 – its price, which in Australia turns out to be $14.51 plus GST. Since at least two of these were going to be needed (one per channel), this meant that the op amps alone would account for just on $32 of the project's cost.

So we looked for an alternative approach. And ultimately we found such an approach in the book *Small Signal Audio Design* (Focal Press/Elsevier, Second Edition 2015; ISBN 978-0-415-70973-6), by renowned audio engineer Douglas Self. In chapter 18 of this book, starting on page 483, Douglas Self gives a great deal of useful information on the design of low-noise balanced input stages.

He explains why the standard differential amplifier configuration like that shown in Fig.1 cannot achieve an output noise level as low as an unbalanced input stage using the same op amp, unless the resistor values are reduced to a level that gives an unacceptably low input resistance – regardless of the actual op amp being used.

He then explains that the best approach is to use the configuration shown in Fig.2, where the differential amplifier is preceded by a pair of op amps connected as voltage follower buffers. This allows the four resistors around the differential amplifier to be reduced to a value giving an acceptable noise level, while the voltage followers provide a unity-gain impedance step-up for the two inputs.

At the same time, the input buffers don't degrade the CMRR (common-mode rejection ratio), because this is still defined by the tolerance of the 820Ω resistors around the differential amplifier and also by its bandwidth.

Douglas Self then goes on to analyse the performance of this configuration and explain why the resistor values can't really be reduced below 820Ω, without degrading the distortion performance. (This is mainly because of the current drive capability of the input buffers and also of the differential amplifier itself.)

He explains that by using 820Ω resistors with the well-known (and much lower cost) 5532 low-noise op amps in all three positions, the noise output of the Fig.2 configuration can be lowered to -112.4dBV. This is about 7.3dB above the level that could be achieved with a single AD797 differential amp, so it's still not good enough.

Main Features & Specifications

Description: a 2-channel balanced input attenuator with low noise and distortion suitable for extending the measurement range of audio analysers and digital oscilloscopes (both self-contained and USB linked). It provides a choice of either balanced/differential or unbalanced inputs for either or both channels, plus the ability to quickly select one of three measurement ranges.

Input resistance (DC): 1MΩ

Input impedance (AC): 100kΩ shunted by approximately 25pF

Maximum input voltage: 10V to ground, 20V peak-to-peak/7V RMS differential on 0dB range; 100V to ground, 200V peak-to-peak/70V RMS differential on other ranges

Output clipping level: approximately 4V peak-to-peak (1.4V RMS sinewave)

Attenuation/measurement ranges: 1:1 (0dB); 10:1 (-20dB); 100:1 (-40dB)

Frequency response (both channels):
0dB range: ±0.1dB from 11Hz – 35kHz, -3dB at 750kHz
-20dB range: ±0.1dB from 11Hz – 20kHz, -0.5dB at 35kHz, -3dB at 1.5MHz
-40dB range: ±0.1dB from 11Hz – 10kHz, -0.3dB at 20kHz, -3dB at 4.25MHz
(Note: these figures apply for both balanced and unbalanced inputs)

Gain/attenuation accuracy: ±2% (±0.2dB)

Signal-to-noise Ratio (20Hz-80kHz measurement bandwidth):
0dB range: 114dB with respect to 1.4V RMS input/output
-20dB range: 108dB with respect to 14V RMS Input/1.4V RMS output
-40dB range: 98dB with respect to 26.6V RMS input/266mV RMS output

Output noise level:
0dB range: -136dBV (158nV) 400Hz-40kHz; -113dBV (2.24μV) at 15Hz
-20dB range: -138dBV (126nV) 400Hz-40kHz; -116dBV (1.6μV) at 15Hz
-40dB range: -138dBV (126nV) 200Hz-40kHz; -116dBV (1.6μV) at 15Hz

Total Harmonic Distortion (20Hz-80kHz measurement bandwidth):
0dB range: <0.0005%, 20Hz-20kHz
-20dB range: <0.0005% 20Hz-2kHz, <0.0025% 2kHz-20kHz
-40dB range: <0.002% 20-25Hz, <0.0015% 25Hz-2kHz

Channel separation with a 1V RMS signal (*QA400 Analyser alone: 100dB*):
0dB range: >100dB, 20Hz-20kHz
-20dB range: >80dB, 20Hz-1kHz; >60dB, 1kHz-20kHz
-40dB range: >95dB, 20Hz-1kHz; >70dB, 1kHz-20kHz

Common mode rejection ratio:
0dB range: >60dB, 20Hz-20kHz; typically >80dB
-20dB range: >50dB, 20Hz-20kHz; typically >65dB at 1kHz
-40dB range: >40dB, 20Hz-20kHz

Power supply: runs from an external ±15V DC supply, with a current drain of approximately 200mA

Multiple op amps & noise cancellation

As Douglas Self moves on to explain, there *is* a fairly easy way to improve noise performance quite significantly: by using an array of identical differential amplifiers driven by an array of input buffers. So that's what we are using in this project, with four differential amplifiers connected in parallel, driven by four pairs of unity-gain input buffers.

The thinking behind this is that connecting two identical amplifiers in parallel causes the noise generated in each to mostly cancel, because they are not correlated. This happens each time the number of amplifiers is doubled, so that by using four identical differential amplifiers in parallel, we can achieve a 6dB drop in the overall noise output. Similarly, we can achieve a further 3dB drop in noise output by using a separate pair of input buffers for each differential amplifier, to achieve better buffer noise cancellation.

The end result of moving to this eight-buffers-driving-four-differential-amplifiers configuration gives a total improvement in noise level of about

9dB – so even if we use 5532 op amps throughout, the noise output level drops to -119.2dBV. This is a couple of dB better than we could achieve with a single AD797, even if it were preceded by a couple of AD797s as input buffers.

But what about the price to be paid for this increase in circuit complexity, in order to achieve that low noise level? The good news is that the 5532 device is a dual op amp, whereas the AD797 is only a single op amp. So we only need six 5532 devices at a current price of around $2.00. So the total op amp price tag for one channel is only about $12 – less than the price of a single AD797.

The end result is that by using Douglas Self's "array" technique, we are able to achieve an impressive output noise level of -119.2dBV in our two channels. We do have to allow for a more complex PCB but we believe that the end result is worth it.

Circuit description

Now have a look at Fig.3 which shows the circuit of the left channel (the right channel is identical). Notice that we have added an unbalanced input, using CON2, to provide the option of connecting the attenuator channels to unbalanced signal sources.

As previously mentioned, inductors RFC1 & RFC2 have been included in series with the 33Ω suppressor resistors at the three inputs, to provide additional rejection of RFI/EMI signals. RFC1 is bifilar wound to provide improved rejection.

Note that we provided for discrete high-frequency compensation capacitors across the upper arms of the attenuator dividers, marked C1 and C2. We thought that these would be needed to compensate for the capacitance of the input voltage limiting diodes D1-D4 and the input capacitance of the array of voltage followers (IC1, IC3, IC4 & IC6).

However, during prototype testing, we discovered that discrete compensation capacitors were not necessary – partly due to the very low capacitance of D1-D4 and partly to incidental capacitance between the short lengths of wire connecting the lugs of range switch S1 to the PCB. As can be seen in the specification panel, the resulting frequency response is quite acceptable.

Note that the outputs of the four differential amplifiers (IC2a/b and IC5a/b) are combined using 10Ω (1%) resistors. This ensures that the final output at CON3 is an average of the four differential amplifier outputs and they won't "fight" each other. As a result, there is no drop in signal gain but there is a welcome drop in noise output due to cancellation.

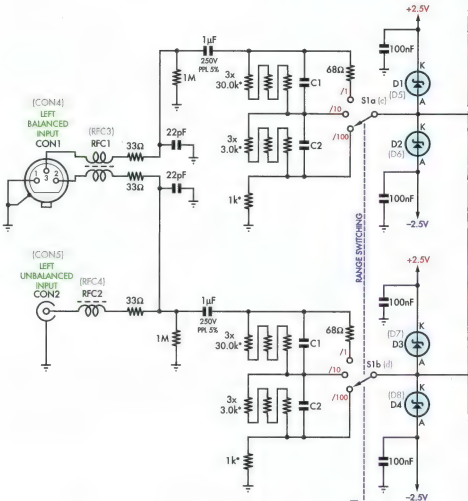

NOTES
1. LEFT CHANNEL CIRCUIT SHOWN ONLY. RIGHT CHANNEL IS IDENTICAL, BUT USES CON4, CON5, CON6, RFC3 & RFC4, S1c & S1d, D5–D8 AND IC7–IC12.
2. DIODES D1 – 8 ARE 1N5711W7F (SOD-123).
3. IC1 – IC12 ARE NE5532D (SOIC-8).
4. ALL RESISTORS SHOWN WITH AN ASTERISK (*) SHOULD HAVE 0.1% TOLERANCE TO ACHIEVE THE SPECIFIED CMRR PERFORMANCE
5. ALL 820Ω RESISTORS ARE SMD 1206 TYPE (1% TOLERANCE).
6. RFC1 – RFC4 ARE ALL WOUND ON FERRITE BEADS (5mm LONG, 4mm OD) USING 0.25mm ECW. RFC1 & RFC3 HAVE TWO BIFILAR TURNS, WHILE RFC2 & RFC4 HAVE TWO TURNS ONLY.
7. COMPENSATION CAPACITORS LABELLED C1 & C2 (TWO EACH PER CHANNEL) ARE NOT NORMALLY REQUIRED.

SC 2-CHANNEL BALANCED INPUT ATTENUATOR

(SIGNAL PROCESSING, ONE CHANNEL)

Before leaving the circuit of Fig.3 we should perhaps draw attention to the notes panel. Part numbers for the right channel circuit are listed here and also shown on the circuit in grey.

Power supply details

Now let's move on to consider the Attenuator's power supply. Nat-

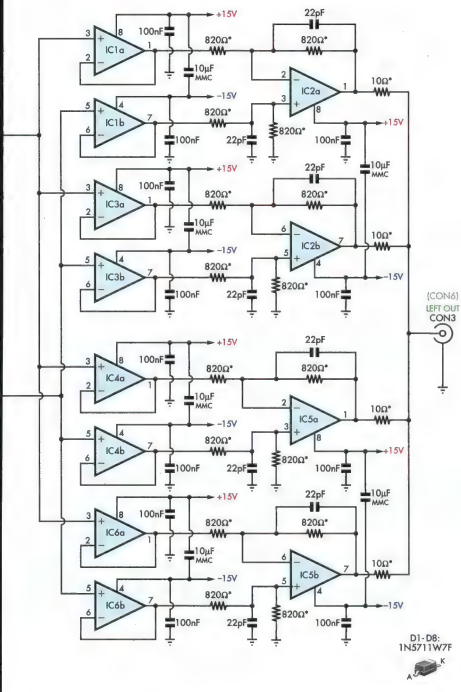

Fig.3: the complete circuit for the left channel of the 2-Channel Balanced Input Attenuator (the right channel is identical). It's based on six NE5532D dual low-noise op amps (IC1a-IC6b, plus six more for the right channel.

urally both the ±15V supplies for the op amps and the ±2.5V rails for the input clipping diodes need to be as quiet as possible, if the full low noise performance of the attenuator itself is to be realised.

The first approach we tried was a fairly standard configuration with an external 17VAC plugpack feeding two half-wave rectifiers, each of which was then driving a 15V regulator followed by a 2.5V regulator. Apart from the external AC plugpack, everything was on the same PCB as the rest of the attenuator's circuitry and therefore inside the shielding metal box.

While this did work, it proved to be virtually impossible to prevent 50Hz hum components and their harmonics from finding their way into the signal circuitry – possibly via radiation from the tracks on the PCB carrying current between the rectifier diodes and the input filter capacitors.

The only practical way to solve this problem was to remove the rectifiers, input capacitors and ±15V regulators from both the PCB and the box, and modify the design so that the unit is operated from a well-filtered and regulated external ±15V DC supply.

As it happens, we were also developing an enhanced version of the March 2011 Universal Regulator module, so the logical approach was to arrange for one configuration of this new Universal Regulator Mk2 to be used for the Attenuator's external ±15V supply. You'll find the Universal Regulator Mk2 described elsewhere in this issue.

Redesigning the attenuator in this way allowed us to simplify its internal power supply circuit to that shown in Fig.4. It has the two incoming 15V supply lines passing directly through to the attenuator's op amps and a pair of low-power TO-92 adjustable regulators (REG3 and REG4) used to provide the ±2.5V rails for the clipping diodes. A 3mm green LED (LED1) is connected between the two 2.5V rails via a 330Ω series resistor to provide power indication.

Because the 17V AC plugpack we're using with the Universal Regulator Mk2 has an untapped secondary winding, we are forced to use a half-wave rectifier configuration. However, at the same time, this plugpack does provide a mains earth output lead and to make use of this we decided to pass this mains earth through the new Universal Regulator Mk2 PCB and thus make it available for load equipment like our Balanced Input Attenuator.

By connecting the attenuator to the regulator module using a four conductor shielded cable as shown at the bottom of Fig.4, we were able to bring the mains earth right through to pin 2 of the attenuator's power input connector (CON7). As a result, the attenuator's metal shielding box can be permanently connected to mains earth for shielding.

However, the earth/0V side of the attenuator's circuitry should not be connected permanently to this mains earth, because in some measurement situations this would have the poten-

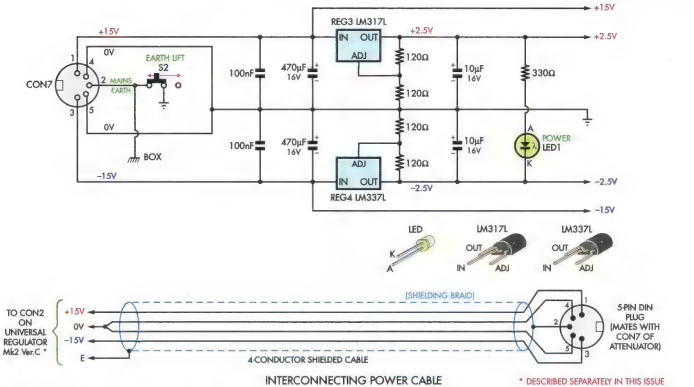

SC 2016 2-CHANNEL BALANCED INPUT ATTENUATOR INTERNAL POWER SUPPLY CIRCUITRY

Fig.4: the power supply circuitry built into the Balanced Input Attenuator, plus the wiring of the power cable used to run the unit from the Universal Regulator Mk2 module described elsewhere in this issue.

tial to create an "earth loop" and hence inject 50Hz hum into the attenuator's signal circuitry.

That's why we have fitted EARTH LIFT switch S2, so that the connection between the attenuator's earth and mains earth can be broken, to see which setting gives the better results.

Note that the cable used to connect the attenuator to the regulator module should be shielded, as shown at the bottom of Fig.4. This is to ensure that hum and EMI are not picked up and fed into the attenuator via the ±15V power lines. It is the shield braid that also connects the mains earth to the attenuator, via pin 2 of CON7.

Construction

Building it is straightforward, with all parts (except for range selector switch S1) mounted on a double-sided PCB coded 04105151 and measuring 160 x 80mm. This board is housed in a small extruded aluminium case measuring 170 x 85 x 54mm (W x D x H). It's similar in size to the case used for the QA400 Audio Analyser, making it easy to stack the two together.

Figs.5 & 6 shows the parts layout on the PCB. As shown most of the parts are fitted to the top of the PCB. The only parts mounted on the bottom are output buffers IC5 & IC12 and their associated components. These are all fitted in the two areas indicated on the underside overlay (Fig.6).

All of the parts used in the input sections of the Balanced Input Attenuator (ie, ahead of range switch sections S1a-S1d) are conventional "leaded" components. This was done to give maximum ruggedness and reliability, and to make the assembly easier. The power supply circuitry along the rear of the PCB also uses leaded components. However, SMD parts are used in the signal circuitry between S1 and output connectors CON3 & CON6.

PCB assembly

Here is our suggested order of assembly, to make this task as easy as possible:

Step 1: fit the SMD resistors and capacitors to the top of the PCB.

Step 2: fit SMD diodes D1-D8. These go on the top side near the front centre of the PCB (behind where S1 will be after final assembly). Be sure to fit each diode with the orientation shown in Fig.5.

Step 3: install the NE5532D dual op amp ICs to the top side of the PCB (IC1-IC4 & IC6-IC11). These come in an SOIC 8-lead SMD package. Make sure that you fit each IC with the correct orientation.

Don't worry if you get solder bridges between the pins when soldering these ICs in; they can be easily removed afterwards using solder wick and a hot iron.

Step 4: repeat step 1-3 for the parts on the underside of the PCB – see Fig.6.

Step 5: once all the SMD components are in place, install the resistors followed by the non-polarised capacitors and the polarised capacitors. Regulators REG3 & REG4 and LED1 can then go in. The latter must be fitted with its longer anode lead towards the centre rear of the board and with its body 18mm above the PCB (use a cardboard spacer between the leads).

The LED is later bent down through 90° so that it protrudes through a

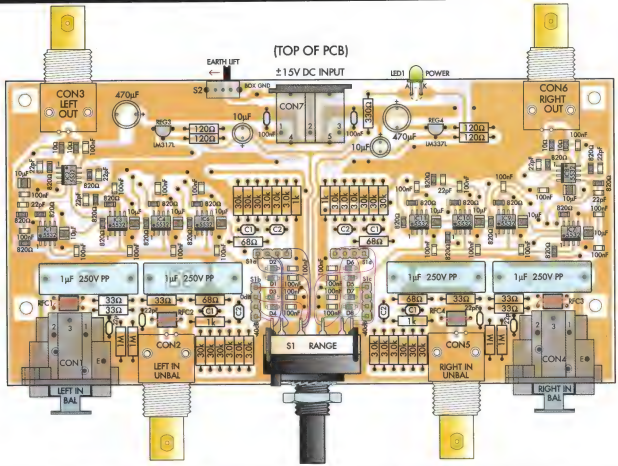

Fig.5: follow this layout diagram to install the parts on the top of the PCB. A mixture of leaded (through-hole) and SMD components is used, with some SMD parts also fitted to the underside of the board as shown on Fig.6. The only component not mounted on the PCB is range selector switch S1, which mounts on the front panel. The photo below shows the completed PCB.

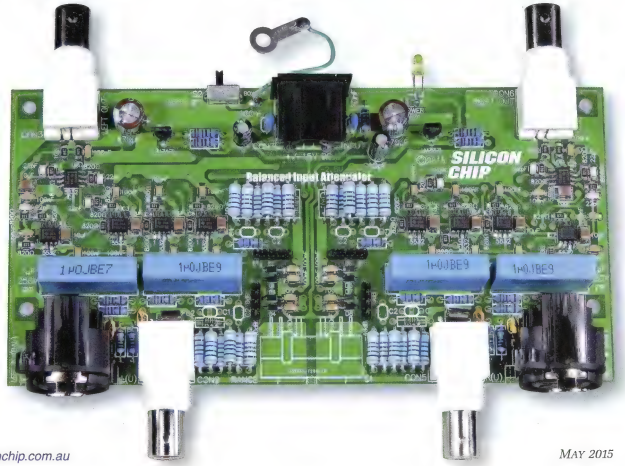

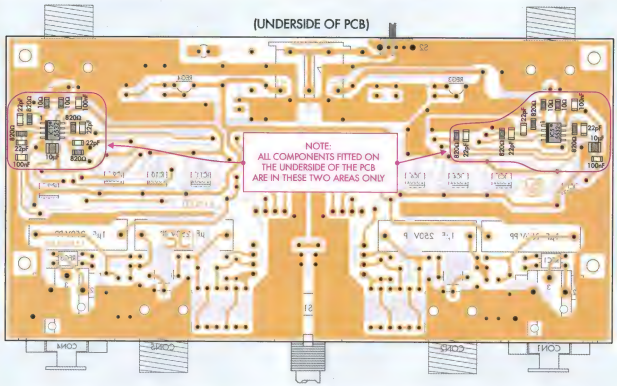

Fig.6: here's how to install the SMD parts on the underside of the PCB. As shown, these parts are fitted to two areas at the top left and top right of the diagram.

matching hole in the rear panel when the unit is assembled into the case.

Step 6: wind the four EMI suppression inductors (chokes). Each inductor is wound on a 5mm-long, 4mm-OD ferrite bead, using 0.25mm enamelled copper wire. All four inductors have only two full turns but the winding details vary.

RFC2 & RFC4 have only a single 2-turn winding. By contrast, RFC1 & RFC3 have two turns wound in bifilar fashion, ie, two short lengths of wire are threaded through the bead together. The ends of these wires are then cut short (about 7mm long at each end) and tinned, ready to be soldered to the pads of the PCB.

Take care not to transpose the end connections of the two wires passing through RFC1 & RFC3, or you'll get a mysterious phase reversal!

The four inductors can now be fitted to the PCB (just behind the positions for CON1, CON2, CON4 & CON5).

Step 7: fit connectors CON1-CON7 to the top of the PCB. Be sure to push each one all the way down so that it sits flush against the PCB before soldering its leads.

Step 8: fit earth lift switch S2 to the rear of the PCB. This is a very small slider switch but it's no harder to solder in place than the SMD components.

Step 9: fit a single PCB terminal pin at the rear of the board, in the position labelled BOX GND in Fig.5 (just between S2 and CON7).

Step 10: complete the PCB assembly by fitting four 4-pin SIL headers in the positions indicated in the front centre of the PCB, grouped around diodes D1-D8 and their bypass capacitors. These headers will be used to make the connections to the four sections of range selector switch S1.

Preparing switch S1

The PCB assembly can now be put

Table 2: Capacitor Codes

Value	µF Value	IEC Code	EIA Code
1µF	1µF	1u0	105
22pF	NA	22p	22

Table 1: Resistor Colour Codes

❑	No.	Value	4-Band Code (1%)	5-Band Code (1%)
❑	4	1MΩ	brown black green brown	brown black black yellow brown
❑	12	30kΩ	orange black orange brown	orange black black red brown
❑	12	3.0kΩ	orange black red brown	orange black black brown brown
❑	4	1kΩ	brown black red brown	brown black black brown brown
❑	1	330Ω	orange orange brown brown	orange orange black black brown
❑	4	120Ω	brown red brown brown	brown red black black brown
❑	4	68Ω	blue grey black brown	blue grey black gold brown
❑	6	33Ω	orange orange black brown	orange orange black gold brown

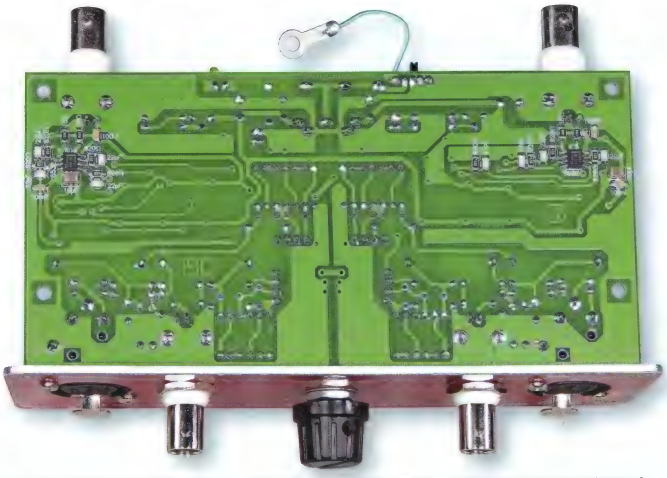

Fig.6: the underside of the PCB carries op amps IC5 & IC12 and their associated SMD parts. Be sure to orientate the op amps correctly and use solder wick to clean up any solder bridges between their pins.

aside while you prepare switch S1, as follows:

Step 1: cut its control spindle to about 12mm long, then smooth off any burrs using a small file.

Step 2: cut a piece of 4-wire rainbow ribbon cable into four 35mm lengths and strip 5mm of insulation from both ends of all four wires. Carefully tin the ends of all wires, using a minimum of heat and solder.

Step 3: solder one end of each wire in each 4-wire cable to one section of switch S1. The first wire is soldered to the inner rotor lug, while the other three wires are soldered to the outer contact lugs as shown in the accompanying photo. Note that in each group the second wire connects to the "most clockwise" contact lug (looking from the front), the third wire to the centre contact lug and the fourth wire to the "most anticlockwise" contact lug.

Step 4: solder the other ends of the ribbon cable wires to the connection lugs of four 4-way SIL sockets (again as shown in the photo). Note that in each case, the wire from the switch

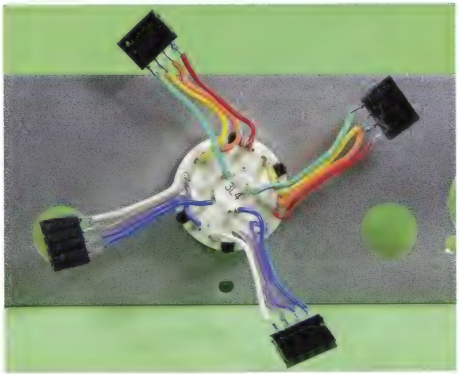

This close-up of the rear of range switch S1 shows how the four short ribbon cables are attached to its connection lugs and also to the four small SIL female header sections used to connect to the PCB.

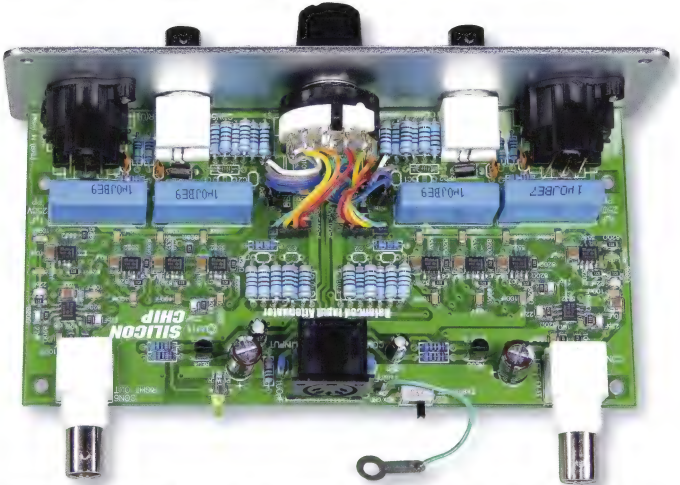

Above: switch S1 is mounted on the front panel, while the four SIL sockets at the ends of its ribbon cables are plugged into matching pin headers on the PCB (see text for details on socket orientation). Note: this photo shows the original metal front panel supplied with the case, whereas the final version uses a PCB front panel and a PCB rear panel. Both the front and rear panel PCBs are available from the SILICON CHIP Online Shop.

rotor connects to one end lug of the SIL socket, with the other three wires soldered to the remaining lugs of the socket in the same order as before. This should be clear if you look closely at the photo.

Alternatively, if you can obtain 4-way cables with "DuPont" connectors already fitted, you can save yourself some effort. Just cut them to length and solder them to the rotary switch.

Your range selector switch assembly is now complete.

PCB front & rear panels

No case preparation is necessary since pre-drilled PCBs with screened lettering are used for the front and rear panels. These take the place of the panels supplied with the case. The front-panel PCB is coded 04105152, while the rear panel PCB is coded 0410515. Both boards measure 170 x 64mm and can be purchased from the SILICON CHIP Online Shop.

Once you have the panels, the next step is to fit the front panel PCB to the main PCB. That's done by first bringing it down at an angle so that the notches at the top of the XLR socket holes slip down behind the PUSH levers on the two sockets. At the same time, the two 13mm-diameter holes must be slipped over the BNC sockets, after which the panel is straightened and pushed all the way up to the PCB, so that it fits close to the four input sockets.

It's then just a matter of securing the panel in pace by fitting the nuts that come with the BNC sockets and by installing pairs of 6G x 6mm self-tapping screws through the 3mm holes adjacent to each XLR socket.

Range selector switch S1 can now be attached to the front panel PCB. That's done by first removing its mounting nut and checking to make sure that its locating spigot is set correctly to give three positions. The switch is then fed through its mounting hole and secured by doing up its mounting nut to hold it firmly in position.

S1's knob can then be fitted to its spindle and its grub screw tightened firmly.

Once the switch is in place, connect the four SIL sockets to their matching pin headers on the PCB. **The "rotor wire" end of each socket goes to the header end labelled S1a, S1b, S1c or S1d.**

As shown on Fig.5, these labels are at the rearmost ends of the headers for S1b & S1c, while they are at the far left and far right of the headers for S1a & S1d. It's important to get these socket/header connections correct, otherwise you'll get some very strange results.

Final assembly

Now for the final assembly – fitting the front-panel/PCB assembly into the case. There are no mounting screws or pillars, because the extruded case has a series of horizontal PCB mounting slots running along each inside end. The main PCB simply slips snugly into the lowest slot at each end, until

The left and right channel BNC output sockets, the earth lift switch and the green power LED protrude through matching holes in the rear panel. Access is also provided through the rear panel to the 5-pin DIN power supply socket.

the front panel PCB meets the case. The back of the main PCB will then be only about 1mm in from the rear of the case, so that the power socket is accessible when the rear panel PCB is later fitted in place.

Once the PCB assembly has been slid into place, secure it using five of the supplied M3 x 12mm socket-head screws (these go through the holes in the front panel). However, before fitting the screw into the lower front-centre hole, it's a good idea to fit a thin M3 star lockwasher *between* the panel and the case. **This is to make sure that there's a good electrical connection between the case and the front panel PCB earth pattern when the screw is tightened up.**

The rear panel PCB is attached to the rear of the case using the five remaining M3 x 12mm screws but before doing this, there are two small jobs to do. The first is to fasten a small solder lug to the inside of this PCB, using an M3 x 6mm machine screw, M3 nut and star lockwasher. This screw passes through the 3mm hole in the rear panel PCB just to the right of the 15mm diameter power input hole in the centre (and just above the rectangular hole for the earth lift switch actuator).

Fit the star lockwasher over the screw before fitting the solder lug and the nut. This will ensure a good electrical connection between the solder lug and the rear panel PCB earth pattern when the assembly is tightened up.

That done, cut a short length (say 50mm) of insulated hook-up wire, strip about 5mm of insulation from each end and tin the wires. One end of this wire is then soldered to the solder lug on the inside of the rear panel, while the other end is soldered to the PCB terminal pin at the rear of the PCB (between CON7 and earth lift switch S2).

The second small job is to bend LED1's lead down by 90° (so that it faces outwards) at a point about 10mm up from the PCB. This will ensure that the LED's body will line up with its matching hole in the rear panel PCB and protrude slightly through it when

Resistors & Thermal Noise

Back in 1926, John Johnson of Bell Labs in the USA discovered that electrical noise was generated in all electrical conductors at temperatures above absolute zero (0K = -273°C), due to thermal agitation of the charge carriers (eg, the electrons). This happens regardless of whether the conductor concerned has any voltage applied to it or is conducting any current. It is basically determined by the resistance of the conductor and the temperature, although the bandwidth of measurement also plays a role in terms of the actual noise voltage.

Johnson's Bell Labs colleague Harry Nyquist worked out how this noise is generated and came up with a number of expressions which allow its power density and/or RMS voltage level over a given bandwidth to be calculated.

The most useful of these expressions is the one to calculate RMS noise voltage for a given measurement bandwidth:

$$Vn = \sqrt{(4.kB.T.R.\Delta f)}$$

where kB is Boltzmann's constant in Joules per Kelvin (1.38×10^{-23}), T is the temperature in Kelvins (°C + 273), R is the resistance in ohms and Δf is the measurement bandwidth in Hertz.

For example, a 1kΩ resistor at 25°C (= 298K) will generate an RMS thermal noise voltage of 0.5876μV (ie, 587.6nV or -124.618dBV), when measured over a bandwidth of 20,980Hz (20Hz – 21.0kHz).

Note that thermal or Johnson (or Johnson/Nyquist) noise is quite different from Shot noise, which is the additional noise generated in a conductor when a voltage is applied and a current begins to flow through it.

Thermal noise also has nothing to do with the actual conducting material inside a resistor or other component – it's purely to do with the resistance and the temperature. So if you have two 1kΩ resistors, one with a metal film element and the other with a carbon composition element, they will both generate the same thermal noise at 298K when measured over the same bandwidth.

Parts List

1 aluminium instrument case, 170 x 85 x 54mm (W x D x H) (Box Enclosures B4-080SI, element14 code 930-7443)
1 double-sided plated-through PCB, code 04105151, 160 x 80mm
1 front panel PCB, code 04105152, 170 x 64mm
1 rear panel PCB, code 04105153, 170 x 64mm
1 ±15V DC power supply assembly plus 17VAC earthed plugpack (Jaycar MP3022) (see text)
4 ferrite beads, 4mm OD x 5mm long
1 200mm length of 0.25mm enamelled copper wire (for winding RFC1-RFC4)
1 4-pole 3-position rotary switch (S1)
1 instrument knob, 20mm diameter with grub-screw
1 subminiature SPDT slide switch, PCB mounting with side actuator (S2) (element14 code 120-1431)
2 3-pin XLR compact female sockets, 90° PCB-mount (CON1, CON4) (Altronics P-0875)
4 BNC sockets, 90° PCB-mount (CON2,CON3,CON5 & CON6)
1 5-pin DIN socket, 90° PCB-mount (CON7)
1 5-pin DIN line plug
1 1m length 4-core shielded cable
4 4-pin SIL header strips
4 4-pin SIL female headers
4 35mm lengths of 4-wire ribbon cable or 2 x 4-way cables with DuPont header plugs at each end (these also replace the SIL female headers)
4 6G x 6mm self-tapping screws
1 M3 x 6mm machine screw
1 solder lug
1 M3 star lockwasher
2 thin M3 star lockwashers
1 M3 nut
1 PCB terminal pin, 1mm diameter
1 50mm length of insulated hook-up wire
4 adhesive rubber feet

Semiconductors

12 NE5532D dual low-noise op amps, SOIC-8 SMD package (IC1-IC12) (element14 code 958-9856)
1 LM317L adjustable regulator, TO-92 (REG3)
1 LM337L adjustable regulator, TO-92 (REG4)
1 3mm green LED (LED1)
8 1N5711W-7-F Schottky diode, SOD-123 SMD package (D1-D8) (element14 code 185-8640)

Capacitors

2 470µF 16V RB electrolytic
2 10µF 16V RB electrolytic
12 10µF 16V MLCC, SMD 1210, X7R dielectric
4 1µF 250V polypropylene 5%
32 100nF 50V MLCC, SMD 1206, X7R dielectric
2 100nF multilayer ceramic
4 22pF 100V disc ceramic, NP0
16 22pF 50V ceramic, SMD 1206, C0G/NP0 dielectric

Resistors (1% tolerance)

4 1MΩ 0.5W metal film
12 30kΩ 0.5W metal film (0.1%)
12 3.0kΩ 0.5W metal film (0.1%)
4 1kΩ 0.5W metal film (0.1%)
32 820Ω 1/8W, SMD 1206 (0.1%)
1 330Ω 0.5W metal film
4 120Ω 0.5W metal film
4 68Ω 0.5W metal film
6 33Ω 0.5W metal film
8 10Ω 1/8W, SMD 1206

the rear panel is fitted.

Once that's been done, position the earth lead so that it won't get damaged, then fit the real panel. Make sure that LED1 and S2 pass through their matching holes in the panel, then fit the mounting nuts to CON3 and CON6 and the five remaining case assembly screws.

Another lockwasher

As with the front panel, it's a good idea to fit a thin M3 star lockwasher between the rear panel and the lower centre of the case, before you fit the lower centre screw. This is again to ensure that there will be a good electrical connection, this time between the rear panel and the case once that screw is tightened. It also means that, the case (and both the front and rear panels) will be reliably connected to mains earth for shielding when the Balanced Input Attenuator is connected to the Universal Regulator Mk2.

Your Balanced Input Attenuator is now assembled and ready for use. However, it's a good idea to fit four adhesive rubber feet to the underside of the case, so that it can be placed on top of the QA400 Analyser or another instrument without scratching it.

All that remains is to wire up the power cable, using the diagram at the bottom of Fig.4 as a guide. This will allow you to connect the unit to the Universal Regulator Mk2 (Version C). Once you've done this, plug the 17VAC plugpack into a power outlet and check that LED1 on the rear of the attenuator lights, to show that it has powered up correctly. SC

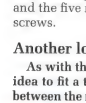
Issues Getting Dog-Eared?
Keep your copies of SILICON CHIP safe with these handy binders
Buy five and get them postage free!
REAL VALUE AT $14.95 PLUS P&P

Available Aust. only. Price: $A14.95 plus $10.00 p&p per order (includes GST). Just fill in and mail the handy order form in this issue; or fax (02) 9939 2648; or call (02) 9939 3295 and quote your credit card number.

UBCRIBING MAKE$ ENE...

because it saves you dollars!

If you regularly purchase SILICON CHIP over the counter from your newsagent, you can $ave more than 10% by having it delivered to your mailbox. Simply take out a subscription – and instead of paying $9.95 per issue, you'll pay just $8.75 per issue (12 month subscription) – and we pay the postage!

How can we do this?

It's all about economics. Printing enough copies to send out to newsagents, in the hope that they'll sell, is very wasteful (and costly!). When readers take out subscriptions, we know *exactly* how many copies we need to print to satisfy that demand. That saves us money – so we pass the savings onto our subscribers. It really is that simple!

You REAP THE BENEFIT!

But wait, there's more! Subscribers also automatically qualify for a 10% discount on any purchases made from the SILICON CHIP online shop: books, printed circuit boards, specialised components, binders – anything except subscriptions!

So why not take out a subscription?

You can choose from 6 months, 12 months or 24 months – and the longer you go, the bigger the savings.

You can choose the print edition, the online edition or both!

Most people still prefer a magazine they can hold in their hands. That's a fact. But in this digital age, many people like to be able to read SILICON CHIP online from wherever they are – anywhere in the world. That's also a fact. NOW YOU CAN – either or both. The on-line edition is exactly the same as the printed edition – even the adverts are included. So you don't miss out on anything with the on-line edition (flyers and catalogs excepted).

OK, so how do you go about it?

It's simple: you can order your subscription online, 24 hours a day (siliconchip.com.au/shop and follow the prompts); you can send us an email with your subscription request and credit card details (silicon@siliconchip.com.au), you can fax us the same information (02) 9939 2648 (international 612 9939 2648) or you can phone us, Monday-Friday, 9am-4.30pm, on (02) 9939 3295 (international 612 9939 3295).

Don't put it off any longer: $TART $AVING TODAY with a SILICON CHIP subscription!

4-Output Universal Voltage Regulator

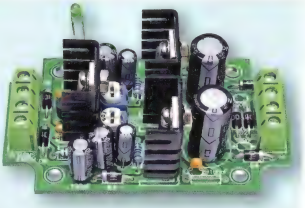

By Jim Rowe & Nicholas Vinen

This is our most flexible linear regulator board yet. It has provision for four outputs: adjustable positive and negative outputs and two fixed positive outputs of 5V & 3.3V. It can be fed from an AC plugpack, small transformer or DC supply with balanced outputs.

THIS MODULE was initially designed to power the Balanced Input Attenuator project elsewhere in this issue but it can also be used to power a wide variety of circuits. It can supply balanced rails for op amps and comparators as well as multiple low-voltage rails to power microcontrollers, digital logic ICs etc.

A typical configuration with four outputs might be: +15V, -15V, +5V and +3.3V. These can all come from the same transformer, as long as the current requirements are modest. It can fit into a small jiffy box for low-current applications and this can even be mounted on the back of a (large) plugpack. Alternatively, there are four mounting holes so it can be held in a larger case by tapped spacers.

It's designed to run from an AC plugpack or small AC transformer but a DC supply can also be used provided you don't need a negative output voltage. Ideally, if a transformer is used, it should have a centre tap although this is not required and indeed most AC plugpacks lack a centre tap connection.

The input and main output connections are made via terminal blocks at either end of the PCB while the 3.3V, 5/6/9/12V and GND terminals are via a polarised header. There's an on-board LED to indicate that power is present.

Our last universal regulator, in the March 2011 issue, was somewhat simpler and cheaper to build than this one but it didn't have as many outputs, nor was its performance quite as good. This new design has quieter outputs which are more suitable for powering sensitive audio gear. In addition, since this one is adjustable, the two main output voltages can be accurately set without changing any components.

Features & Specifications

Output voltages: 1.3V to 22V, -1.3V to -22V plus either 12V, 9V, 6V or 5V + 3.3V*

Continuous output current: typically 200mA+ per output, depending on voltages

Peak output current: up to 1.5A on adjustable outputs, 1A/250mA for fixed outputs

Output ripple: typically <1mV RMS on all outputs up to 250mA load

Line regulation: <2mV/V (main outputs), <1mV/V (auxiliary outputs)

Load regulation: <20mV/A

Transient response (1A load step): 500mV drop, 400mV overshoot, 200ms recovery

Quiescent current: ~40mA (AC supply), ~25mA (single polarity DC supply)

Protection: short circuit, over-current, over-temperature, reverse polarity (with DC supply)

** Main positive output must be at least 2V higher than auxiliary output voltage*

Different configurations

This design has provision for four regulators as noted above, however if you don't need four different voltages you can leave some components off to save time and money.

Since it's common to need two or three regulated supply rails, we're providing a few different options for building the module:

- Version A: this deluxe version includes all four outputs, two adjustable and two fixed, plus a power LED. It can run off single, dual or centre-tapped transformer secondaries.
- Version B: like Version A, this one has positive and negative adjustable outputs but does not include the two extra fixed positive regulators for circuits where they are not required.

- Version C: similar to Version B but the output voltages are set by fixed resistors and it will only run from a transformer with a single secondary winding. This is the version used to supply the ±15V rails for the Balanced Input Attenuator from a 17VAC plugpack.
- Version D: similar to Version A (deluxe) but without the negative adjustable regulator and associated components. Thus it has three outputs, all positive: one adjustable and two fixed. It can run from an AC or DC supply, including batteries, DC plugpacks and in-line switchmode supplies.

Other combinations are possible and, for example, it would be possible to modify Version D so that it has a full bridge rectifier at its input, which might be handy if you want to run it from an AC plugpack (ie, with a single secondary winding). All four versions can be built using the same PCB.

Voltage limitations

There are many different combinations of voltages that you can get from this board but there are also a few restrictions. These apply mainly to the two auxiliary outputs, which would normally be +5V and +3.3V but there are some other options.

The first restriction is that the main auxiliary output (normally 5V), which can deliver 1A, must be at least 2V less than the positive adjustable output. **If you want to have a 6V, 9V or 12V output instead of 5V, it's simply a matter of swapping this fixed regulator for one with a different output voltage. However, the 2V headroom is still required.**

Also, note that any current drawn from either auxiliary output reduces the maximum available from the main positive adjustable output.

Note that if you choose to change the 5V output to a higher voltage, you will lose the 3.3V output as the specified regulator will not withstand a higher input voltage. You can also omit the 3.3V regulator if you don't need that output.

Current capability

While the two adjustable outputs are capable of delivering peak currents of up to 1.5A, in practice heat dissipation will limit the continuous current delivery to a fraction of this. Similarly, the higher-voltage fixed output is capable of 1A but it too is normally dissipation-limited. The 3.3V output has no such limitation since it is only rated at 250mA anyway.

How much current you'll get from this board depends mainly on the output voltages and the voltage(s) you're feeding in. In most cases, we expect constructors will be running it from a transformer (including AC plugpacks) and selecting the right transformer for maximum current and to avoid loss of regulation.

Transformer selection

Having figured out what output voltages you need and how much current is required by the circuit it's going to power, use the following procedure to select a transformer or power supply.

Let the highest positive voltage that's required be Vp(max) and the total current required from all positive outputs be Ip(sum). Similarly, let the magnitude of the negative output voltage be Vn and the required negative current be In.

For a transformer with a single secondary, the ideal voltage is whichever of these two results is higher:

V1 = (Vp(max) + 3.5V + Ip(sum) x 20) x 0.7
V2 = (Vn + 3.5V + In x 20) x 0.7

Whereas for a transformer with two secondaries or a single centre-tapped secondary, use:

V1 = (Vp(max) + 3.5V + Ip(sum) x 10) x 0.7
V2 = (Vn + 3.5V + In x 10) x 0.7

For a centre-tapped transformer, double the resulting voltage.

It's unlikely you'll get a result that's a round number so choose a transformer with the next highest voltage rating. Often, you will find that you need a transformer with the same AC voltage rating as the highest DC output voltage you have selected, eg, a 15VAC transformer is used for ±15V DC outputs.

Now let the transformer secondary voltage be Vac. To calculate the required transformer VA rating, use the following formula for a transformer without a centre tap:

VA = Vac x 1.5 x (Ip(sum) + In)

For transformers with a centre tap, use:

VA = Vac x 0.75 x (Ip(sum) + In)

Note that it's generally a good idea to choose a transformer with a somewhat higher VA rating if at all possible. This is not just us being conservative; with a circuit like this, because most of the current will be drawn at the voltage peaks, these calculations will underestimate the I^2R losses in the transformer and so it will get hotter than you might expect. Thus a trans-

Parts List

1 double-sided PCB, code 18105151, 76 x 46mm
1 UB5 jiffy box (optional) OR
4 M3 tapped spacers and machine screws for mounting
1 transformer or plugpack to suit required voltages/currents
4 2-way mini terminal blocks, 5.08mm pitch (CON1,CON2)
1 3-way polarised header (CON3)
2 2kΩ mini horizontal trimpots (VR1,VR2)
3 mini flag (6073B-type) heatsinks (for REG1-REG3)
3 M3 x 10mm machine screws and nuts (for mounting heatsinks)
2 grommets to suit input/output cables (optional)

Semiconductors

1 LM317T adjustable positive regulator (REG1)
1 LM337T adjustable negative regulator (REG2)
1 7805T 5V 1A regulator* (REG3)
1 MCP1700-3.3/TO LDO 3.3V regulator (REG4)
8 1N4004 diodes (D1-D8)
1 3mm LED (LED1)

Capacitors

2 2200μF 25V electrolytic
3 100μF 25V electrolytic
2 10μF 25V electrolytic
2 1μF multi-layer ceramic
4 100nF multi-layer ceramic

Resistors (0.25W, 1%)

1 3kΩ 0.5W	2 1kΩ
1 1.5kΩ	2 100Ω
2 1.1kΩ	2 10Ω 0.5W

Notes:

(1) Some parts may be omitted, depending on which version is being built.

(2) For wider voltage adjustment range, reduce 1kΩ resistor value. 500Ω trimpots can be used instead for a narrower adjustment range.

(3) *A different 78xx series regulator may be substituted in some cases (see text). In this case, REG4 is not fitted and the 3.3V output is not functional.

Table 1 Power Supply Conguration Options

Power Supply	Adjustable Output(s)	Auxiliary Output(s)	Dropper resistor(s)
9VAC plugpack or transformer, 4.5VA	±9V 200mA each	5+3.3V* 200mA total	0Ω (wire links)
18VAC centre-tapped transformer, 4.5VA	±9V 200mA each	5+3.3V* 200mA total	0Ω (wire links)
12VAC plugpack or transformer, 6VA	±9V 200mA each	5+3.3V* 200mA total	10Ω 0.5W
12VAC plugpack or transformer, 6VA	±12V 200mA each	5+3.3V** 200mA total	0Ω (wire links)
24VAC centre-tapped transformer, 6VA	±12V 200mA each	5+3.3V** 200mA total	0Ω (wire links)
15VAC plugpack or transformer, 7.5VA	±12V 200mA each	5+3.3V** 200mA total	10Ω 0.5W
15VAC plugpack or transformer, 7.5VA	±15V 200mA each	5+3.3V# 200mA total	0Ω (wire links)
30VAC centre-tapped transformer, 7.5VA	±15V 100mA each	5+3.3V# 300mA total	0# (wire links)
17VAC plugpack or transformer, 8VA	±15V 200mA each	5+3.3V# 200mA total	10Ω 0.5W
36VAC centre-tapped transformer	±15V 200mA each	5+3.3V# 200mA total	10Ω 0.5W
36VAC centre-tapped transformer	±17V 200mA each	5+3.3V## 200mA total	0Ω (wire links)
48VAC centre-tapped transformer***	±24V 200mA each	5+3.3V## 150mA total	0Ω (wire links)
12V DC plugpack or lead-acid battery	+9V, 200mA	5+3.3V* 200mA total	0Ω (wire link)
15V DC plugpack or switchmode supply	+12V, 400mA	5+3.3V** 250mA total	0Ω (wire link)
18V DC plugpack or switchmode supply	+15V, 400mA	5+3.3V# 250mA total	0Ω (wire link)
24V DC plugpack or lead-acid battery***	+12V, 100mA	5+3.3V** 80mA total	0Ω (wire link)

Note: current ratings selected for maximum 2W dissipation per heatsinked TO-220 package; higher currents possible with sufficient airflow. For example, add 50% to all current values for 3W dissipation per package.

* alternative auxiliary output: 6V DC
\# alternative auxiliary outputs: 6V, 9V or 12V DC
** alternative auxiliary outputs: 6V or 9V DC
alternative auxiliary outputs: 6V, 9V, 12V, 15V or 18V DC
*** use 1000µF 35V capacitors

former with a somewhat higher rating (say 50%) is desirable.

If that all seems too hard, have a look at Table 1. We've done these calculations (plus more explained below) for a number of common configurations. Assuming your needs match up with those, you can simply read the supply options from the table.

Regulator dissipation

Having chosen a transformer, it's now a good idea to check that the regulator dissipation will be reasonable. If it's too high, the regulators could overheat and shut down; this is unlikely to cause any damage but it will prevent your circuit from working properly!

Let the adjustable positive output voltage be Vp1 and the auxiliary positive voltages be Vp2 (normally 5V) and Vp3 (normally 3.3V). Similarly, the maximum current drawn from each output is Ip1, Ip2 and Ip3. Dissipation can then be approximated as:

DISreg1 = (Vac x 1.4 – Vp1) x Ip(sum)
DISreg2 = (Vac x 1.4 – Vn) x In
DISreg3 = (Vp2 – Vp1) x (Ip2 + Ip3)
DISreg4 = (Vp3 – Vp2) x Ip3

The results are in Watts. As stated earlier, you don't really need to worry about the dissipation of REG4 as it will normally be less than 0.5W. REG1-REG3 can handle about 2W each before you risk them shutting down; more in free air (say 3W) and even more if you have forced air (eg, a fan blowing over the heatsinks).

If using a DC supply, replace the Vac x 1.4 term with the maximum DC input voltage the regulator will experience. For example, if it's being powered from a lead-acid battery which could be charged during use, to be safe, substitute 15V.

It's a good idea to calculate the sum of all four figures, especially if you're planning to put the board in a jiffy box. This will give you an idea of how much heat will be coming off the board. More than a few Watts total and the jiffy box will get mighty warm!

Note that if you have had to choose a transformer with a higher than ideal voltage rating (due to availability, etc) and the dissipation values for REG1 and REG2 look a little on the high side, the board does have provision to fit a couple of 0.5W dropping resistors before the regulators. These will allow you to reduce the dissipation of each regulator by around one third to one half watt each; not a major reduction but possibly enough to prevent them from overheating and shutting down. If you do want to do this, calculate the required resistor values as follow:

Rp = (Vac x 1.4 – 3.5 – Vp1) ÷ (Ip(sum) x 3)
Rn = (Vac x 1.4 – 3.5 – Vn1) ÷ (In x 3)

Round to the next lowest preferred resistor value. For the Balanced Input Attenuator power supply, we had to use a 17VAC plugpack to get the Earth connection (ideally we would have used 15VAC). The output voltages are ±15V and the current requirement is around 180mA each. If you do the calculations, you'll come up with 10Ω, which is what we used. The dissipation in REG1 & REG2 then reduces to:

DISreg1 = (Vac x 1.4 – Vp1 – Rp x Ip(sum)) x Ip(sum)
DISreg2 = (Vac x 1.4 – Vn – Rn x In) x In

In our case, this leads to a reduction in dissipation of about 0.33W each. Note that this does not change the total dissipation; it merely moves some of it away from REG1 and REG2 and into the added resistors. This means you can't really reduce the dissipation

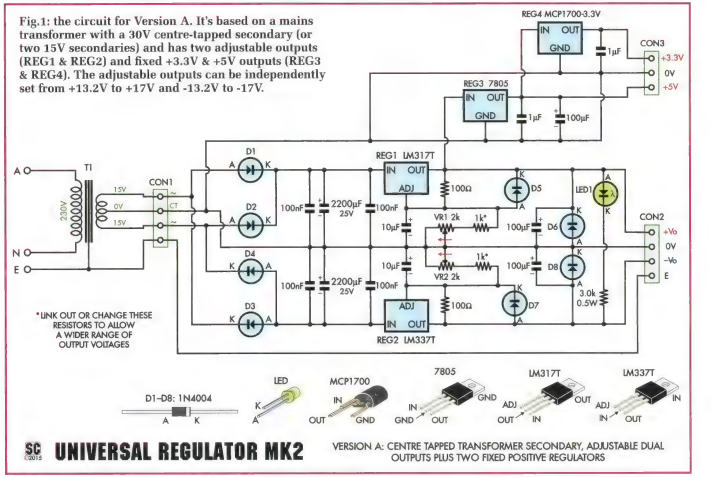

Fig.1: the circuit for Version A. It's based on a mains transformer with a 30V centre-tapped secondary (or two 15V secondaries) and has two adjustable outputs (REG1 & REG2) and fixed +3.3V & +5V outputs (REG3 & REG4). The adjustable outputs can be independently set from +13.2V to +17V and -13.2V to -17V.

SC 2015 UNIVERSAL REGULATOR MK2

VERSION A: CENTRE TAPPED TRANSFORMER SECONDARY, ADJUSTABLE DUAL OUTPUTS PLUS TWO FIXED POSITIVE REGULATORS

per regulator by more than we did or you risk burning out the resistors.

Running from a DC supply

If using a regulated DC supply or battery, the considerations are much simpler. Around 3V headroom is required, so for example with a 12V DC supply the highest available output voltage will be 9V.

For a battery, calculate using the lowest expected terminal voltage. The current drawn from the DC supply is simply the sum of the current drawn from each regulator output, plus the quiescent current of around 25mA.

As mentioned earlier, you can't use the negative output if the regulator board is running off DC.

Circuit description

The full circuit is shown in Fig.1 and this is version A. Here we're assuming that the power supply is a mains transformer with a 30V centre-tapped secondary, or two 15V secondaries connected in series. These secondaries connect to a bridge rectifier formed by diodes D1-D4 on the board via terminal block CON1, to charge up two 2200µF electrolytic capacitors to roughly ±20V.

REG1 then regulates the +20V to somewhere between +13.2V and +17V, depending on the setting of VR1. Similarly, REG2 regulates the -20V rail to between -13.2V and -17V depending on how VR2 is set.

The lower limits of these voltages are determined by the ratio of the 1kΩ and 100Ω divider resistors while the upper limits are determine by the need to have at least 2V of headroom for the regulators, when taking into account the ~1V ripple expected on the input capacitors with moderate (~100mA) loads on the regulators. Thus, if you need a lower output voltage you can reduce the 1kΩ values or link these resistors out entirely.

Similarly, you could change the 2kΩ trimpots to lower values (eg, 500Ω) to give a narrower adjustment range. This would make accurately setting the output voltage easier but would require the initial range (determine by those fixed resistors) to be set fairly accurately. When choosing fixed resistor values, factor half of the resistance of VR1/VR2 into the equation, so that these pots will be roughly centred at the required output voltage.

The formula to select these resistors is: **Vout ÷ 0.0125 - 100Ω**. Subtract half the trimpot resistance then pick the closest resistor value.

The 10µF capacitors from each ADJ terminal to ground greatly improve the ripple rejection for REG1 and REG2. That's because they reduce the impedance between the ADJ terminal and GND, which would otherwise be limited by the value of the resistors used in the divider. There are also 100µF capacitors at each regulator output to improve transient response.

Diodes D6 & D8 prevent the regulator outputs from being pulled negative at switch-on/switch-off by a load connected directly between +Vo and -Vo. This is an especially common problem when a transformer with a single secondary is being used, as depending on which part of the mains cycle power is applied, either the positive or negative rail will come up first and any capacitors across the output (typically within the load) will cause the other output to be pulled in the wrong direction.

LED1 is connected across both out-

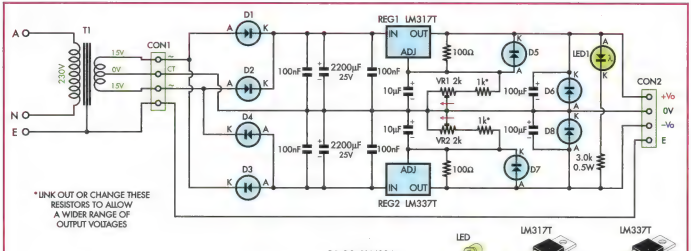

UNIVERSAL REGULATOR MK2

VERSION B: CENTRE TAPPED TRANSFORMER SECONDARY, ADJUSTABLE DUAL OUTPUTS

Fig.2: Version B is similar to Version A but omits the two fixed voltage regulators. This is the version to build if you only require split supply rails that can be set anywhere from +13.2V to +17V and -13.2V to -17V. Trimpot VR1 adjusts the positive rail, while VR2 adjusts the negative rail.

puts and will light as long as there is more than a few volts between them.

REG3 provides the +5V rail and this runs from the output of REG1. There is quite a large voltage drop from the input filter capacitor (in this case, around 20V) and the 5V output so this arrangement splits the dissipation between REG1 and REG3, both of which would normally be fitted with a heatsink. It also means the 5V rail will be very quiet and virtually free of 50/100Hz ripple. Input bypassing is provided by REG1's output capacitor while a 100µF electrolytic capacitor provides output filtering.

REG4 derives the 3.3V rail from the 5V output and has 1µF ceramic capacitors at both input and output. REG4 can only handle an input voltage of up to 6V, thus REG3 is required if it is to be used. It can provide up to 250mA output and will only dissipate (5V - 3.3V) x 0.25A = 425mW at full load, well within the capabilities of the small TO-92 package (625mW).

Both the 3.3V and 5V rails are available at CON3 while the two main outputs and mains earth are at CON2. Note that you could change REG3 to a higher-voltage type of regulator if required but then you would have to leave REG4 out as it will not handle the higher input voltage.

Note also that a mains earth connection is made between CON1 and CON2 but is not joined to the rest of the circuit. This would normally be connected to ground at the load end. In the Balanced Attenuator project, this allows for an Earth Lift switch to disconnect the two should the circuit be earthed elsewhere.

Other versions

Fig.2 shows version B of the circuit in which REG3 and REG4 are not fitted and the associated components have also been deleted. This is how you would build the board if you only need the two main (±) outputs, ie, without 5V or 3.3V rails.

Fig.3 shows version C which is the same as version B but with two changes:

(1) Trimpots VR1 and VR2 have been omitted. This reduces the cost slightly and gives fixed output voltages within about ±5% of the selected values (due to regulator and resistor tolerances). However, note that you may not be able to select resistors of exactly the value required to set your desired output voltage, thus the difference could be more than 5%.

(2) A 17VAC plugpack has been used and this does not have a centre-tapped secondary. As such, diodes D2 and D4 have been omitted since they are not used and D1 & D3 operate as two half-wave rectifiers. The disadvantage is that the filter capacitors are only recharged alternately at 50Hz rather than simultaneously at 100Hz however there is little choice as few AC plugpacks have centre-tap connections available.

As explained earlier, this is the version used to power the Balanced Input Attenuator presented elsewhere in this issue.

The circuit in Fig.4 is similar to Fig.1 but all the components associated with the negative output have been removed. This is shown powered from a transformer with a centre-tapped secondary but a DC supply could also be used, with its negative output connected to the CT terminal of CON1 and its positive output to either of the remaining terminals (ignoring the earth connection, which could be left unconnected).

Note that the current-limiting resistor value for LED1 has been reduced as it is now running from a lower voltage without the presence of the negative rail.

Construction

Once you have decided which version to build, calculate the required resistor values to set the output voltage ranges. If you are fitting the optional voltage-dropping resistors you will need to calculate their value too, otherwise you will be fitting wire links in their place. Refer to the overlay diagram appropriate to the configuration you are building, which will be one of Figs.5-8 (or a variation thereof).

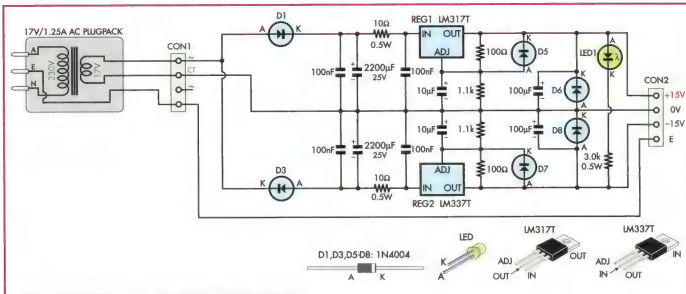

SC 0915 UNIVERSAL REGULATOR MK2

VERSION C: UNTAPPED TRANSFORMER SECONDARY, DUAL ±1.5V OUTPUTS

Fig.3: Version C uses a 17VAC plugpack (ie, no centre-tap), with D1 & D3 operating as half-wave rectifiers. In addition, trimpots VR1 & VR2 have been omitted and the output rails set to ±15V by the 100Ω and 1.1kΩ resistors. This is the version that's used to power the Balanced Input Attenuator described elsewhere in this issue.

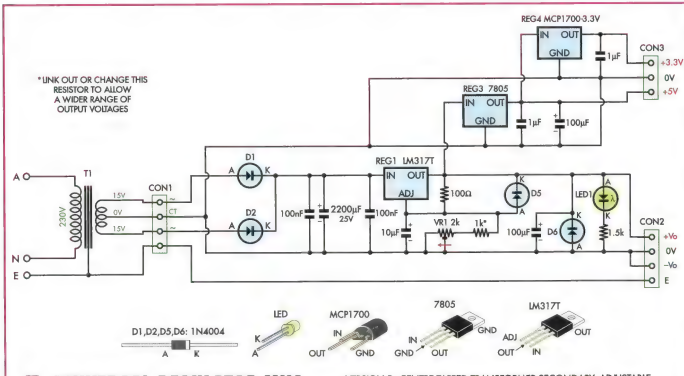

SC 0915 UNIVERSAL REGULATOR MK2

VERSION D: CENTRE TAPPED TRANSFORMER SECONDARY, ADJUSTABLE POSITIVE OUTPUT PLUS TWO FIXED POSITIVE REGULATORS

Fig.4: Version D has fixed +3.3V & +5V outputs based on REG4 & REG3, plus a single +13.2V to +17V adjustable output based on REG1. It's similar to Version A but does away with the parts associated with the adjustable negative output rail. Note that linking out or changing the 1kΩ resistor allows a wider range of output voltages to be set (all versions).

Start by fitting the resistors, keeping in mind any variations in value. If your version requires any wire links, form these from the resistor lead offcuts and solder them in place. Follow with the 1N4004 diodes, being careful to match up the orientation of each with the appropriate overlay diagram before soldering. There are between four and eight diodes depending on the version.

Fit the ceramic capacitors next, followed by trimpots VR1 and VR2. If you don't need to be able to adjust the outputs and have selected appropriate resistors to give the required voltages,

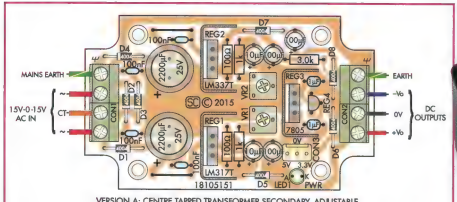

VERSION A: CENTRE TAPPED TRANSFORMER SECONDARY, ADJUSTABLE DUAL OUTPUTS PLUS TWO FIXED POSITIVE REGULATORS

Fig.5: this Version A board layout corresponds to the circuit diagram of Fig.1. All parts are installed on the PCB, with the adjustable outputs available at CON2 and the fixed +3.3V & +5V outputs at CON3.

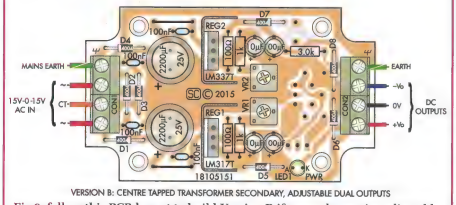

VERSION B: CENTRE TAPPED TRANSFORMER SECONDARY, ADJUSTABLE DUAL OUTPUTS

Fig.6: follow this PCB layout to build Version B if you only require adjustable split rail outputs (ie, 13.2V to +17V and -13.2V to -17V). Note the heatsinks fitted to the regulators.

link them out as shown in Fig.7.

Next, dovetail the pairs of 2-way terminal blocks to form two 4-way blocks and place them on the PCB with the wire entry holes facing the nearest edge of the board. Ensure they are pushed down flat before soldering the pins. REG4 can then go in, if you are fitting it. If so, crank its leads out (eg, using small pliers) to suit the holes in the PCB.

CON3 can be fitted next, assuming you are using either of the auxiliary outputs.

The smaller electrolytic capacitors go in now. Be careful with their orientation: in each case, the longer positive lead goes towards the bottom of the board, as shown in Figs.5-8. You will probably need to crank the leads out to fit the PCB pads and depending on the size of the 100µF capacitors, you may find you need to bend them sideways a little in order to avoid interfering with adjacent components (see photos).

Now secure each TO-220 regulator you are using firmly to a small flag heatsink using an M3 x 6mm machine screw, shakeproof washer and nut.

Make sure that each regulator is fitted straight on the heatsink, then drop it into place on the PCB. Check that its leads are inserted evenly and then solder and trim them. Repeat for any other regulators being installed.

The larger electros can now go in, then all that's left is the power indicator LED. We arranged for ours to poke out through the lid of the jiffy box. To do this, solder it with the bottom of the lens 26mm from the top of the PCB. This is close to full lead length (about 5mm short). Ensure the longer anode lead goes into the hole to the left of the board, ie, with the orientation shown in Figs.5-8.

Testing & setting up

There isn't much to check. Connect your power supply temporarily to CON1 and power it on. Verify that LED1 lights, then measure the output

Table 2: Capacitor Codes

Value	µF Value	IEC Code	EIA Code
1µF	1µF	1u0	105
100nF	0.1µF	100n	104

Table 1: Resistor Colour Codes

❑	No.	Value	4-Band Code (1%)	5-Band Code (1%)
❑	1	3kΩ	orange black red brown	orange black black brown brown
❑	1	1.5kΩ	brown green red brown	brown green black brown brown
❑	2	1kΩ	brown black red brown	brown black black brown brown
❑	2	100Ω	brown black brown brown	brown black black black brown
❑	2	10Ω	brown black black brown	brown black black gold brown

This photo shows the Version A board fitted into a UB5 plastic case. The power LED pokes through a hole in the lid.

The completed unit can be attached to the back of a plugpack supply as shown here. It's shown taped into position here but could also be secured using silicone adhesive.

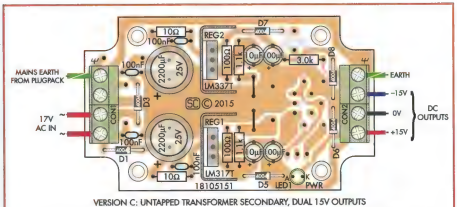

VERSION C: UNTAPPED TRANSFORMER SECONDARY, DUAL 15V OUTPUTS

Fig.7: the Version C PCB layout has fixed ±15V DC outputs and runs from a 17VAC plugpack (see parts list for Balanced Attenuator). This is the version to build to power the Balanced Input Attenuator. Below is the assembled PCB.

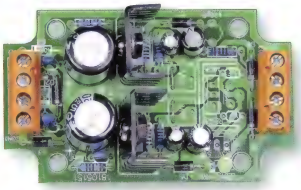

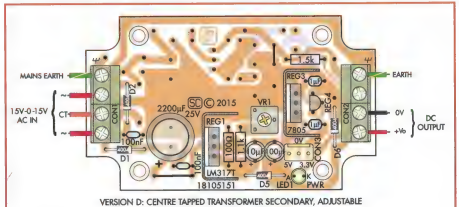

VERSION D: CENTRE TAPPED TRANSFORMER SECONDARY, ADJUSTABLE POSITIVE OUTPUT PLUS TWO FIXED POSITIVE REGULATORS

Fig.8: here's how to install the parts to build Version D. It has fixed +3.3V & +5V outputs at CON3, plus an adjustable +13.2V to +17V output at CON2.

voltages and ensure they are correct. If VR1 and/or VR2 are fitted, simply adjust them to get the required voltage(s). If you can't, you may need to change the associated fixed resistors.

Putting it in a box

If you want to mount the board in a UB5 jiffy box as we did (and as we recommend for the Balanced Input Attenuator power supply), you will need to make some minor modifications. You can't slide the board into the pre-cut notches since the components are too tall, so you need to cut new notches 4mm tall at the bottom of each of the eight ribs using side-cutters and then pliers to remove the remainder. The board will then snap into the bottom of the case, with some cajoling.

Next, drill a 3mm hole in the upper-left corner of the lid for the power LED. This goes 10mm from the long side and 23mm from the short side of the lid. Check the position with respect to the PCB before drilling it.

Two holes are required in the left-hand and righthand ends of the box for the input and output cables. Because the terminal blocks mount so close to the ends of the box, these will need to be made fairly high up and then the individual wires looped down to reach the board. You may wish to fit grommets in these holes, with the right diameter for the cable you're using.

For the Balanced Input Attenuator, the input cable from the plugpack has three wires and these are connected as shown in Fig.7. The output goes to a 4-wire shielded cable fitted with a 5-pin DIN plug. The wiring details for this cable are shown in the Balanced Input Attenuator article (page 70).

Once the unit has been tested and the lid screwed onto the box, you can then use double-sided tape to attach it to the rear of the plugpack itself – see adjacent photo. SC

Versatile new development kit from MikroElektronika

BUGGY:

Take your favourite MCU for a ride!

Review by Ross Tester

"Buggy" is a micro workstation unlike anything you've seen before. While it has four wheels and motors, adding MikroElektronica's "click" boards means it can do a lot more than run around!

We first noticed this intriguing little product when MikroElektronika started advertising it in SILICON CHIP a few months back. Not so much because it was a robot buggy – robots and buggies are a dime a dozen these days – but for what it appeared to offer.

Apart from publishing their adverts, we hadn't had much to do with MikroElektronika – they are on the opposite side of the planet, after all (the company is based in Belgrade, Serbia). But the limited amount of information in the advert prompted us to look a bit closer at both the company and this particular device.

First we had a good look at their website (www.mikroe.com) and that only whetted our appetites even more. So we got in touch with them via email . . . and this review is the outcome.

First, about MikroElektronika

You've probably noticed that microcontroller projects in SILICON CHIP usually (if not always!) concentrate on one particular architecture, be it PIC, Atmel and so on. There's a good reason for this – while programming languages are often very similar, there are subtle differences which makes it more practical to go one way than another. It's often a matter of personal preference, too.

MikroElektronika is different. Their stated aim is to unite all seven major architectures with their compilers, with the same intuitive IDE, tools and libraries across those different architectures. "We want to provide people with the unique ability to switch from one vendor to another while still using the same code with minimum adjustments," they say.

It's a laudable objective – but is it practical or even possible?

Their MikroElektronika Buggy suggests that it is!

Inside the box: the buggy "chassis" at left, complete with wheels and motors, various cutouts, three connectors for "click" boards, a USB cable and inside the internal box, a "clicker 2" board with headers. . . plus that excellent short-form manual.

The Buggy

When you open your Buggy package, you'll find the main panel, or PCB chassis (they call them "plates"), with its four wheels (and individual DC motors) already in situ. It also has an on/off switch, LED head and tail lights, various connectors (or provision for same), along with all its SMD components already fitted to the PCB.

Speaking of the PCB, it's double sided and ob-

viously very nicely made with close-tolerance cutouts and an easy-to-read silk-screen overlay on both sides.

Also in the box there will be three mikroBUS PCBs (ours also included a wireless transceiver module [can be Bluetooth or Wifi]), a LiPo battery, a mini USB cable a variety of PCB "dress panels" and a box containing a "clicker 2" board with enough header connectors to mate with the main panel. The clicker2 board is the heart of the system - a compact development platform with an MCU and two mikroBUS sockets. You can use it to quickly build your own gadgets with unique functionalities and features, or to expand the Buggy concept to make it do, well, whatever you want. An extensive range of accessories is available from MikroElektronika, which we will look at shortly.

You could also add another option, the mikromedia board which is a multimedia development system with a 320 x 240 TFT touchscreen and a rich set of onboard modules. Both the clicker2 and the mikromedia boards are available for different microcontroller architectures.

Of course, we mustn't forget the 28-page assembly and instruction manual – which we should add is also extremely well presented with very clear colour pics.

Assembly

This is a relatively simple 12-step process, starting with the battery insertion/connection and ending with some quite simple soldering to hold it all together. At this stage you haven't placed the "clicker 2" driver board because you're going to need to make some decisions – ie, what do you want to do with the Buggy/what do you want the Buggy to do for you.

Clicker 2 and click boards

The photo (below) shows about 100 plug-and-play click boards arranged around the clicker 2 development board. Already, this photo is out of date because MikroElektronika are constantly releasing new click boards – sometimes several per month. At last count there were about 120 but even this is likely to be wrong! (See www.mikroe.com/click for the latest list with descriptions of what they do . . . and be amazed!)

The click boards are designed to take all of the hardware configuration out of the process – they do it all for you.

Lights . . . camera . . . action!

We mentioned earlier that the Buggy already had headlights (white LEDs) and tailights (red LEDs) but didn't mention it also has turn indicators (yellow LEDs). All of these are individually accessible via your software, as are the four stepper motors to give you forward, reverse and turn capabilities. Each motor can draw up to 400mA, depending on speed, and each is current limited to prevent too much power being drained from the battery.

It's called MikroElektronika's "most outdoorsy hardware" – but it is so much more than that!

Speaking of battery, the 3.7V, 2000mAh LiPo battery is designed to be charged in-situ via the USB port. An on-board charge management controller looks after the charging automatically and will turn off charging when the battery is full.

If you want an on-board camera, that's also available (via a click board of course!).

Android control

There's even an open-source Android app for driving the Buggy. This app talks to the buggy through a wireless transceiver (another click board!) in either Bluetooth or WiFi. After you've built the Buggy, spend a little time simply having fun with your Android phone and take the Buggy to the road!

mikroBootloader

While the Android app above is already installed, you will almost certainly want to take your fun further. The clicker 2 and mikromedia boards have a USB-HID bootloader which makes it easy to install the firmware. All you need do is download the mikroBootloader app, along with the firmware, which is all available from www.mikroe.com/buggy. From there, it's a simple 4-step procedure to load the app from your computer. (Your own custom firmware in mikroC, mikroBasic or mikroPascal would also be uploaded with the mikroBootloader).

The mikroe community

Even before you own a Buggy, you're welcome to browse (and join) the forum with more than 150,000 posts already. You're likely to find answers to questions you haven't even thought of yet! Visit www.mikroe.com/forum.

In summary

The MikroElektronika Buggy is very much the starting point. Just how far you take it depends on . . . just how far you *want* to take it.

With the almost continuous release of click boards covering an incredible range of applications, even if you don't have programming skills (yet – you soon will with the Buggy!) you're going to have an enormous amount of fun while you learn. Highly recommended!

Pricing and more info: visit www.mikroe.com/buggy

There are more than 120 (and growing) plug-and-play click boards to do just about anything!

CIRCUIT NOTEBOOK

Interesting circuit ideas which we have checked but not built and tested. Contributions will be paid for at standard rates. All submissions should include full name, address & phone number.

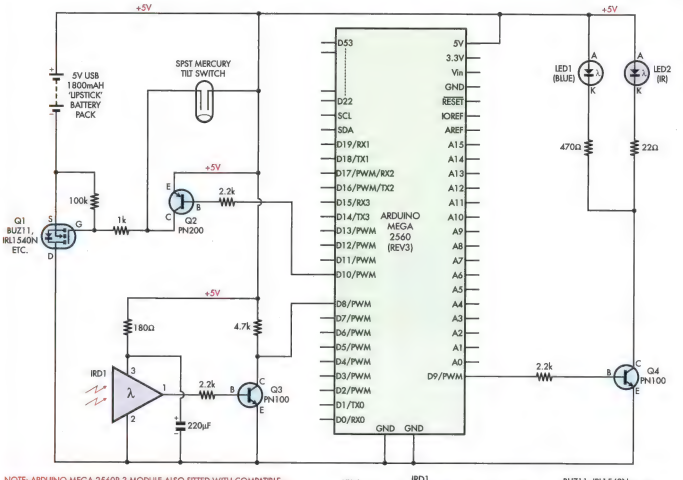

NOTE: ARDUINO MEGA 2560R.3 MODULE ALSO FITTED WITH COMPATIBLE 3.5" DIAGONAL TFT LCD/TOUCH SCREEN (WITH MICRO SD CARD) SHIELD.

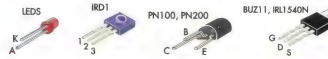

Arduino-based learning IR remote with LCD touch-screen

The number of IR remote controls in use seems to be ever-increasing and while there are universal remotes on the market, they have limitations such as the number of devices they can control. This circuit combines the functions of multiple IR remote controls into one colour touch-screen Arduino-based unit with the bonus that even a newcomer to Arduino could rework the software and display screens to suit their needs.

The hardware comprises an Arduino Mega 2560 microcontroller module, an Arduino TFT LCD Shield with microSD card, a small daughter board that houses the handful of other components and a 5V lipstick-style battery bank. It was built into a small plastic food storage container a with a clip-down lid.

Various screens of buttons can be set up by defining an array of labels and the associated function of each button in the label text. The label text defines whether it can send IR signals, open a secondary screen, permit programming of the IR buttons, change settings etc. The main screen provides the facility to select the controlled device and the commonly used functions.

Prior to using the remote, each of the functions must be learnt from an existing remote control. The device is first selected then the learning remote is placed into program mode, the required function button is pressed and the relevant button on the other remote is pressed to send the IR signal. Other buttons are similarly learnt and pressing the program button finishes the programming sequence.

In learning mode, infrared receiv-

Phillip Webb is this month's winner of a $150 gift voucher from Hare & Forbes

er IRD1 and transistor Q3 receive the signal that is then sensed by the Arduino micro at digital input pin D8. The IR signal comprises a series of high/low pulses and the duration of these pulses is measured to microsecond resolution and written to a file on the microSD card.

This text file has an 8-character name, with the first 2-digit number representing the selected device, followed by a hyphen, a 2-digit number representing the currently displayed screen, followed by a hyphen and then a 2-digit number representing the specific button pressed. This simple and flexible arrangement reduces Arduino memory use and provides a large number of possible IR buttons and codes.

A stored IR signal is replayed by pressing the required button and the IR signal is read from the specified file. The series of high-low pulses are produced by digital output pin D9, then to Q4 and IR LED2, with LED1 providing a visible indication of the output pulse. The modulation frequency is set to 38.4kHz and can be adjusted in the settings screen.

The remote is powered by a simple 5V USB "lipstick" style power pack. These rechargeable units are cheap and provide reasonable life given that the unit draws about 150mA. Q1 & Q2, in conjunction with a Jaycar tilt switch, provide a power on/automatic off capability.

When the unit is tilted, the switch closes, Q1 turns on, the Arduino micro then boots and digital output D10 is taken low, thus keeping Q2 on until there have been no buttons pressed for a time-out period that can be varied in the settings screen. After this time out, pin 10 is taken high, switching Q2 and Mosfet Q1 off and the Arduino microcontroller is automatically powered down.

These photos show two of the on-screen displays: the Main screen (left) and the Data-IR Code screen (right). Both the TFT LCD touch-screen shield and the Arduino Mega 2560 and was sourced at low cost from an eBay supplier.

The software can be easily modified to create different screens and the desired layout. That's because there is simply a label array definition required and one function call to create a new screen by specifying the number of button rows and columns, width and height etc in the parameters of the calling function.

There is also a colour settings screen to provide different colour schemes and a facility to view the IR data sequence as an array of high/low pulses with the duration indicated in milliseconds. This is very useful for checking the structure of a particular IR remote. After a little use, popular IR coding systems such as the Sony Infrared Code structure can be easily identified.

The Arduino Mega 2560 and TFT LCD touch-screen shield were sourced at low cost from an eBay supplier.

I had to modify the Arduino SD library file ***SD2Card.h*** to make the sketch function and also locate the UTFT driver for the TFT LCD screen. My screen has an ILI9327 chip using an 8-bit interface. The ***ILI9327_8*** file is in a folder and this must be placed in the ***Arduino\libraries\UTFT\tft_drivers*** folder. Both files along with the Arduino sketch are on the SILICON CHIP website.

The TFT LCD function calls are provided by the UTFT library developed by Henning Karlsen under the creative commons licence.

Phillip Webb,
Hope Valley, SA.

MAY THE BEST contribution WIN!

As you can see, we pay $$$ for contributions to Circuit Notebook. Each month the BEST contribution *(at the sole discretion of the editor)* receives a $150 gift voucher from Hare&Forbes Machineryhouse. That's yours to spend at Hare&Forbes Machineryhouse as you see fit - buy some tools you've always wanted, or put it towards that big purchase you've never been able to afford!

HARE&FORBES MACHINERYHOUSE
100% Australian owned Established 1930
"Setting the standard in quality & value"
www.machineryhouse.com.au

Contribute NOW and WIN!
Email your contribution now to:
editor@siliconchip.com.au
or post to PO Box 139, Collaroy NSW

A modern version of the Ping-Pong game

Here is a simulated logic circuit of a ping-pong game in which a moving light is shifted left and right through an 8-bit universal CMOS shift register to simulate the moving ball. Two players can play this game, each having access to a PLAY pushbutton and both sharing a START pushbutton.

The circuit is based on a 74HC299 8-bit shift register (IC1), a 40106 hex inverting Schmitt trigger (IC2), a 4081 AND quad 2-input gate (IC3), a 4013 dual D-type flipflop (IC4) and a 4071 quad 2-input OR gate (IC5).

IC1, the bidirectional shift register, is employed to cause the light to move in two directions. When a logical "1" is applied to the pin 1 (S0) input and a "0" to the pin 19 (S1) input of this chip, the light shifts right and if a "1" is fed to pin 19 and a "0" to pin 1, the light shifts left.

IC2a forms a clock for IC1 with its frequency set to 1-7Hz, depending on the setting of VR1. The rate of the movement of the light is determined by the frequency of the clock. The higher the frequency, the faster the light moves in either direction. The game becomes much more challenging at 7Hz since the light moves faster.

IC4a is used to provide the appropriate logic signal (1 or 0) for the S1 & S0 pins of IC1, to reverse the direction of the shift at the time when the light reaches the extreme right or left position.

IC4b, in turn, is a starter and is employed to light the Start LEDs, namely LED1 or LED8, through IC3a & IC3b when IC1 is Reset and the circuit is in the standby mode. IC4b also applies a "1" to pin 11 (DSR) or pin 18 (DSL) of IC1 to start the left or right shift of the light once the START pushbutton is momentarily pressed.

IC2b is a pulser applying a "1" to pin 6 of IC4a to Set it when the PLAYER1 button is momentarily pressed. IC2d is also a pulser, generating a single pulse to Reset IC4a when the PLAYER2 button is momentarily pressed.

Playing the game is easy. When the circuit is switched on, LED8 is turned on. The game begins when either the PLAYER1 or PLAYER2 pushbutton is pressed momentarily. PLAYER1 lights LED8 (places a ball) at the extreme right and PLAYER2

Firmware update for the 12-Digit 2.5GHz Frequency Counter

UK reader Ben Cook has produced a revision to the firmware for our 12-Digit Frequency Counter project published in the December 2013/January 2014 and July 2014 issues of SILICON CHIP. He has rewritten the 'DoAScan' subroutine which checks the control buttons on the Counter front panel, to improve its debouncing algorithm while also preventing multiple triggers from the same key press.

We have examined the revised assembly code listing and programmed a PIC16F877A chip to try it out in practice. As a result, we can confirm that his subroutine revision does make a very worthwhile improvement in the Counter's 'user interface'.

The revised version of the firmware (0411112B_BJC_V121) is available on the SILICON CHIP website so that other constructors of the 12-Digit 2.5GHz Frequency Counter can reprogram their processor to improve its user interface. Both the assembly code listing and the hex listing for the revised firmware will be provided.

Our thanks to Ben Cook for his improvement to the project firmware, and also for allowing us to make it available to other constructors.

Jim Rowe,
SILICON CHIP.

Radio, Television & Hobbies: the COMPLETE archive on DVD

This remarkable collection of PDFs ***covers every issue*** of R & H, as it was known from the beginning (April 1939 – price sixpence!) right through to the final edition of R, TV & H in March 1965, before it disappeared forever with the change of name to EA.

For the first time ever, complete and in one handy DVD, every article and every issue is covered.

If you're an old timer (or even young timer!) into vintage radio, it doesn't get much more vintage than this. If you're a student of history, this archive gives an extraordinary insight into the amazing breakthroughs made in radio and electronics technology following the war years. And speaking of the war years, R & H had some of the best propaganda imaginable!

Even if you're just an electronics dabbler, there's something here to interest you.

Please note: this archive is in PDF format on DVD for PC. Your computer will need a DVD-ROM or DVD-recorder (not a CD!) and Acrobat Reader 6 or above (free download) to enable you to view this archive. This DVD is NOT playable through a standard A/V-type DVD player.

ONLY $62.00 + STOCKS LAST

Exclusive to: SILICON CHIP

HERE'S HOW TO ORDER YOUR COPY:

BY PHONE:* (02) 9939 3295 9-5 Mon-Fri

BY FAX:# (02) 9939 2648 24 Hours 7 Days

BY EMAIL:# silcon@siliconchip.com.au 24 Hours 7 Days

BY MAIL:# PO Box 139, Collaroy NSW 2097

BY INTERNET^^ siliconchip.com.au 24 Hours 7 Days

* Please have your credit card handy! # Don't forget to include your name, address, phone no and credit card details. ^^ You will be prompted for required information

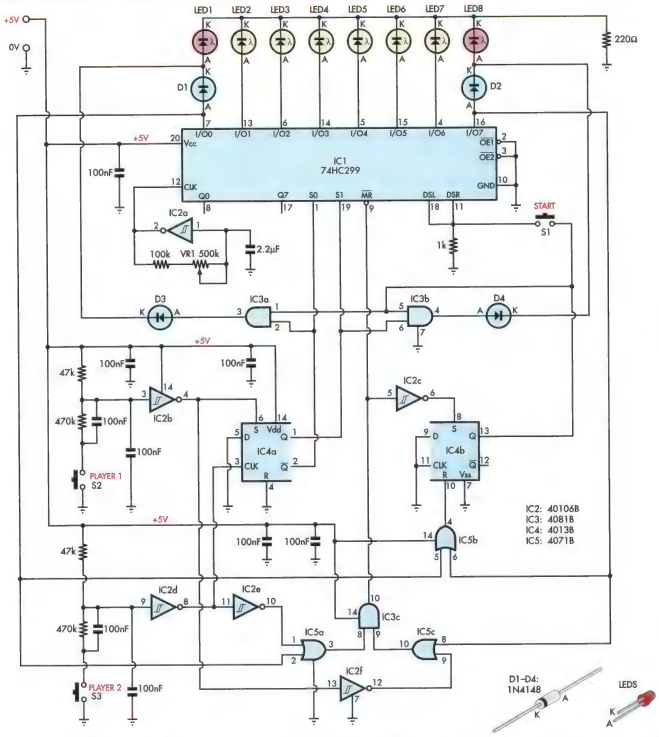

lights LED1 at the extreme left. Then a momentary press on the START button causes the light to start moving to the other extreme position.

To continue the game, each PLAYER pushbutton must be pressed precisely at the time when the leftmost (LED1) or rightmost (LED8) LED is ON. An early or late press on the PLAYER buttons will Reset IC1 through IC3c causing the moving light to disappear. At the same time, IC4b is Set through IC2c.

Thus, either LED1 or LED8 will light as soon as the moving light disappears.

The game can be resumed by momentarily pressing the START button again. If the PLAY buttons are pressed after the light has reached the other extreme and disappeared itself, either LED1 or LED8 will light, depending on the pushbutton that has been pressed. In case the PLAY buttons are not pressed after the moving light has reached the extreme position and disappeared, IC4b will remain in the Reset state until one of the PLAY buttons is pressed again to Set it and cause the relevant start LED to light.

Mahmood Alimohammadi, Tehran, Iran. ($60)

Vintage Radio

By Rodney Champness, VK3UG

The AWA Radiola 523-M: the last vibrator-powered radio

Battery/vibrator-powered domestic radios started life in the 1930s and continued to be manufactured in Australia until the late 1950s. They were still used in some areas of rural Australia well into the 1970s. Here we take a look at AWA's battery/vibrator-powered Radiola 523-M, a 4-valve superhet design with some interesting features.

WHAT EXACTLY IS a vibrator? Well, it's not what you might be thinking, a least not as used in battery-powered valve radios. In operation, a vibrator converted a low battery voltage (typically 2-32V) to a much higher voltage, necessary to power the valves used in battery-operated receivers.

A vibrator is basically an electromagnetic switch that opens and closes a set of contacts at a fixed frequency of 50-150 times per second, depending on the particular circuit it's used in. It's either a double-pole or 4-pole switch that switches DC power one way and then the other through the centre-tapped primary winding of an iron-cored transformer.

This rapid switching results in a waveform across the winding that approximates the waveform from an AC supply. The secondary winding has many more turns on it than the primary and so a much higher voltage is produced across it. The secondary is also centre-tapped and its AC output is converted to DC by a second set of points in the vibrator. These are synchronised with the first set of points, hence the name "synchronous vibrator".

Synchronous vibrators are the most likely type to be found in domestic radios intended for remote areas where mains power was unavailable. By contrast, so-called non-synchronous vibrators were more likely to be found in car radios. This latter vibrator type required an external rectifier to convert its AC output to DC and either a 6X5GT or 6X4 valve was often used for this task.

So that is basically how vibrator power supplies work but there are other things to consider to make them suitable for powering radio receivers. In operation, a vibrator makes and breaks the voltage applied to the transformer and this results in an abrupt change in the current being drawn from the supply. As a result, the transformer's winding inductance tries to maintain this current across the vibrator's points as they open. Unless steps are taken to prevent this, the result is severe sparking which would completely destroy the points within a few hours of operation.

To solve this problem, one or more capacitors are connected across either the primary or the secondary of the transformer, or both windings in some cases. By carefully selecting the capacitor values, the circuit (including the winding) resonates at the switching frequency and the sparking is markedly reduced.

If you are repairing a vibrator and the value of the capacitor is unknown, the trick is to try a variety of values and select the value that causes the vibrator to draw the least current. The voltage ratings of these capacitors, commonly called "buffer capacitors", may need to be as high as 2000V DC.

Because they are used under quite arduous conditions, polypropylene types should be used. Polyester capaci-

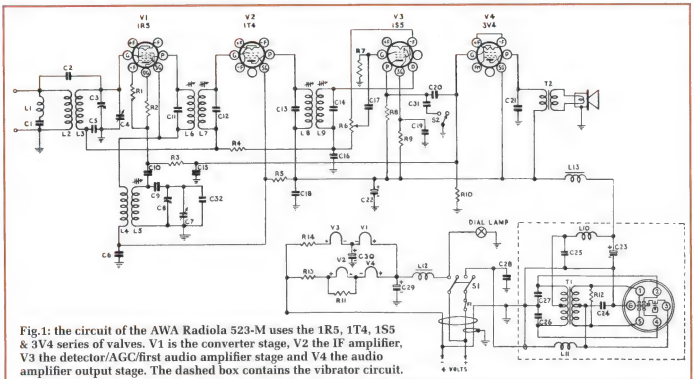

Fig.1: the circuit of the AWA Radiola 523-M uses the 1R5, 1T4, 1S5 & 3V4 series of valves. V1 is the converter stage, V2 the IF amplifier, V3 the detector/AGC/first audio amplifier stage and V4 the audio amplifier output stage. The dashed box contains the vibrator circuit.

tors can have a short life-span when used as buffer capacitors and so should not be used. However, they can be used in all other parts of the power supply where paper capacitors were used.

One drawback of a vibrator supply is that while the sparking is reduced by using suitable buffer capacitors, RF (radio-frequency) interference can still be quite evident. To overcome this, the whole vibrator supply is housed in a shielded metal enclosure and the leads going into or out of this enclosure are filtered to remove interference. In addition, the supply is mounted on rubber buffers so that there is little or no physical noise from the operation of the vibrator.

In short, designing a vibrator power supply with low electrical and acoustic noise is not as simple as designing a conventional power supply.

Circuit details

Fig.1 shows the circuit details of the AWA Radiola 523-M. It's really quite conventional for a 4-valve battery/vibrator-powered receiver built around 1949 and uses the economical 1R5, 1T4, 1S5 & 3V4 series of valves. These valves required only 90V HT and 50mA of filament current to perform well, the low filament current being necessary to minimise power consumption from the dry batteries used to power the receiver – important in remote regional areas.

As shown on Fig.1, the antenna input circuit has an IF (intermediate frequency) rejection circuit (L1, C1) connected across the antenna-earth terminals. That's there to prevent IF signals from being picked up and fed back in through the converter stage, which could upset the receiver's operation.

The rest of the input circuit is conventional, with capacitor C2 giving some boost to the higher-frequency signals. C3, one section of the tuning gang, tunes the incoming signal and this is then fed to the grid of converter stage V1.

The oscillator tuned circuit is connected between V1's grid and chassis, while feedback winding L4 is con-

This photo shows the dilapidated state of the cabinet, dial scale and speaker cloth before restoration, while the photo on the facing page shows the set after restoration. The exterior of the set now looks almost like new again.

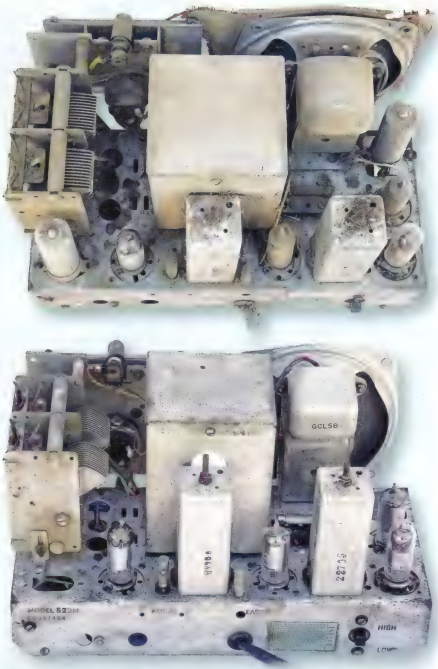

These photos show the chassis before (top) and after (bottom) restoration. The valves were cleaned by washing them in soapy water, while the chassis was cleaned by brushing away the dust, then scrubbing it with a kerosene-soaked pad. The enclosure in the middle of the chassis houses the vibrator supply.

nected to the screen grid which acts as the plate for the oscillator. The other end of L4 is at virtual earth/chassis since capacitor C6 bypasses any RF signals (whether IF or local oscillator) to earth. In addition, L4's inductance is low enough that C6 effectively bypasses the lower ends of C11 & L6 to earth as well.

The output from converter stage V1 is fed through the first IF transformer consisting of C11, L6, C12 & L7. From there, the resulting 455kHz IF signal is fed to IF amplifier stage V2 (1T4) and then fed via a second IF transformer to the detector and AGC diodes in valve V3 (1S5). The recovered audio is then amplified by V3's pentode section after which it is fed to the grid of audio amplifier stage V4 (3V4). Output stage V4 then drives the loudspeaker via a transformer.

The 3V4 needs around -6.5V of bias in this circuit. To achieve this, the filament supply line is series connected across the 4V supply, with pins 1 & 7 connected to +4V (via L12) and pin 5 connected to the filament of the 1T4. By doing this and earthing the grid via resistor R10, the valve is effectively biased to around -3.25V without further measures. To get the additional bias voltage required, a portion of the oscillator's grid voltage is also applied to the 3V4 to raise the bias level to around -6.5V.

Basically, some innovative circuit variations are needed when the filaments of valves are series connected, so that correct operating conditions are achieved. We'll take a look at the power supply circuit later on.

Restoration

The chassis is easily removed from its cabinet by removing two screws and then sliding it out. Note that the on-off volume and tuning controls are concentric and are mounted through the centre of the dial scale, so they also come out with the chassis. This would have to be the easiest set to dismantle for service that I have come across.

Once the chassis had been removed, the very grubby cabinet was scrubbed clean using a nail brush dipped in soapy water. This was done carefully though, to avoid wetting the paper label pasted inside the cabinet (this label shows the chassis layout). The cabinet was then carefully rinsed with clean water and rubbed down with car cut and polish. It now looks almost like new again.

Restoring the chassis wasn't anywhere near as easy, as mice had made a home in the set and the acid in their urine had etched through the plating on the chassis in quite a few places. Dozens of small pieces of paper had also been left in the chassis by the mice but they hadn't done any damage to any of the parts or the wiring.

I began by brushing away the dust and other muck as best I could, then used a kitchen scourer soaked with household kerosene to clean the chassis. Restoring the chassis to pristine condition would have involved removing all the parts and the wiring, then re-plating the chassis and other metal parts and rebuilding the set. In fact, some vintage radio enthusiasts actually do this and their restored radio sets look like new.

When it came to this set, I was happy to leave most of the parts in

place and simply clean the chassis as best I could. Removing everything and completely rebuilding the set is a time-consuming process.

The dial scale was also dirty so I very carefully cleaned it with a soft brush. I then used some soapy water on an inconspicuous part of the dial scale to see if the lettering remained in place. All seemed to go well, so I cleaned the rest of the dial and all the lettering remained intact. Unfortunately, it was still a little dirty when the water dried, so I tried the same technique again on the test area and this time some of the lettering did come away.

Apparently, the letters had been softened by the first round of cleaning so I left the remainder of the dial scale alone and simply left it to dry before carefully putting it back together. It wasn't a tragedy but I still wasn't at all pleased with myself as I hadn't been careful enough. It's always important to be very careful with dial scale markings – some remain on the glass and so the dial can be easily cleaned while in other cases, the letters can come away with very little provocation.

Overhauling the vibrator

Having cleaned the chassis and dial, I turned my attention to the vibrator assembly. First, I removed the HT (high tension) filter choke (L13) and the LT choke (L12) to improve access to the vibrator mounting points. That done, I disconnected the three wires going into the vibrator supply module (earth/chassis, +4V input and the HT+ output) and disconnected the earthing braid that connects the vibrator's metal case to the chassis.

The next step was to remove the three circlips that secure the resilient mounting to the chassis and remove the assembly. The plastic sleeves over each of the three mounting posts were still in good order but the resilient mounts were in a bad way. I didn't have the correct "spongy" material for these mounts on hand, so improvisation was necessary when it came to replacing them.

First, I glued some foam rubber material to the bottom of the shielded enclosure, to keep it clear of the chassis. This was simply cut to suit and mounted near each of the mounting posts. The material used is approximately 5mm thick and 25mm wide and is readily available from Clark Rubber in whatever length you want.

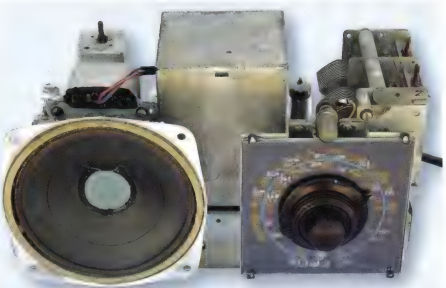

The chassis and dial scale cleaned up quite well, although some of the lettering at the bottom of the dial scale lifted off during the cleaning process. Great care needs to be taken when cleaning dial scales to avoid this problem.

Once the glue was dry, I remounted the vibrator supply on the chassis, with an 8mm ID rubber grommet fitted to each mounting post. This was followed by a thick fibre washer, the original metal washer and the circlip, to hold the mounting assembly together. I also attached a self-adhesive felt furniture pad to the side of the enclosure, so that it could not possibly touch an adjacent IF transformer which is only a few millimetres away.

As stated above, resilient mounting of vibrator supplies was routine so that the physical noise made by the vibrator was minimised.

The actual vibrator power pack is also mechanically isolated from the shielded enclosure. In order to remove it, it's necessary to remove the self-tapping screw at the top back edge of the enclosure and the three screws which go through the side. The supply can then be lifted out of the enclosure for restoration.

I began by replacing all the paper capacitors, even though I found that they all tested OK, much to my surprise (the same types in the main part of the receiver all later tested leaky). Buffer capacitors C26 & C27 were replaced with polypropylene types and the other paper capacitors with polyester types. The 20µF 200V electrolytic capacitor was replaced with a 22µF 160V unit and that was quite safe to do as the HT voltage won't exceed around 120V, even if the valves aren't drawing any current.

Basically, I replaced all the capacitors just to be sure and because it's very time consuming to access the vibrator supply to replace any defective parts. The only part in the supply that is easily accessible is the vibrator itself, as it was considered to be a consumable item with a limited life.

My next step was to remove the mechanical vibrator assembly from its case. This involved desoldering the lug at the base of the can, then removing the circlip that holds the vibrator's base in place and sliding the assembly out.

The first thing I noticed was that a foam rubber support at the top which keeps the assembly away from the case had gone "gooey". I scraped the goo off and then got busy with some contact cleaning strips that I've had for years to clean the points. Quite a lot of black dust came off the points so the effort was worthwhile.

If you don't have contact cleaning strips, then very fine wet and dry paper can be used instead to carefully clean between the various points in the vibrator.

Before cleaning the points, I found that the vibrator wouldn't start reliably but it did so after the points had been cleaned. Once it was all working, I found some thin rubber strip around 20mm wide and wrapped this around the end of the vibrator assembly. This was then tied in place with thin plastic spaghetti tubing, the idea being to prevent the vibrator from coming into

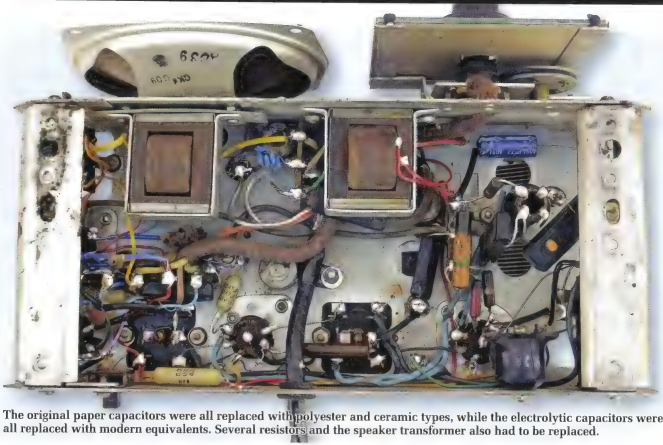

The original paper capacitors were all replaced with polyester and ceramic types, while the electrolytic capacitors were all replaced with modern equivalents. Several resistors and the speaker transformer also had to be replaced.

contact with the inside of the can and causing acoustic noise.

The refurbished vibrator supply has since proved to be reliable although its output voltage is somewhat less that I would prefer. But then, this unit is now over 65 years old.

Electronic repairs

Quite a bit of work was necessary to restore the chassis to working order. My first step here was to check the paper capacitors and these all proved to be leaky. As a result, they were replaced with polyester and ceramic types. The electrolytic capacitors were also all replaced, as they had been in this set for many years. Further component checks then revealed three resistors that were out of tolerance and so they too were replaced.

In addition, much of the wiring had perished so I cut the lacing away from the loomed wires and replaced any suspect leads. In the end, I replaced about 80% of the wiring which was a rather time-consuming task.

Next, the valves were removed and cleaned in soapy water after checking that their filaments were OK. The filaments were all intact but not so the primary winding of the speaker transformer. This meant that the speaker transformer had to be replaced and I then took a close look at the speaker itself. It initially looked to be a dead loss as there was grit in the voice coil. However, after removing the felt pad in the centre of the cone, I was able to gently blow out the gritty bits. The felt pad was then re-glued in place, as was the outer edge of the voice coil which had separated from the frame.

Once these repairs had been completed, the speaker worked quite well again. And that really was good news because I didn't have a matching spare.

At this stage, the two filter chokes were reinstalled and the leads from the vibrator power supply reconnected. During this work, the 4V supply cable running from the set to the battery was found to be very much the worse for wear. It has two wires which are shielded and another two that are outside the shield.

Obtaining an original replacement cable would have been impossible, so I made a replacement cable up. It doesn't look like the original but it functions the same way. Fortunately, I was able to come up with some braid of sufficient diameter to accommodate four wires through its centre – two for the filament supply and two for the vibrator supply. This braid was obtained from a length of RG213 coaxial cable – it was just a matter of removing the outer cover and pulling out the centre and the insulation.

Once the new cable had been assembled, I wound electrical tape along its length to prevent any mishaps due to short circuits. What was interesting was that once I had the set fully operational, I found that neither of the earth/chassis wires inside the cable performed any useful purpose. The braid was earthed to the chassis and went to the negative terminal of the battery. The two wires that run from the positive terminal of the battery are needed to minimise any ripple on the filament line that runs from the vibrator supply. In effect, the battery acts as a very big filter capacitor.

The braid is necessary to shield the vibrator supply lead as quite noticeable RF is present on this wire. I found that in order to minimise this interference, it was necessary to add a 0.1µF capacitor between the wiper of the lefthand section of S1 and earth (this removed almost all of the interference).

With the valves reinstalled, it was time to test the receiver. After applying power, the HT rose to around 75V which is a bit low but the set certainly showed signs of life. It worked well at the bottom end of the band but it appeared dead when tuned to frequencies above 800kHz. Subsequent

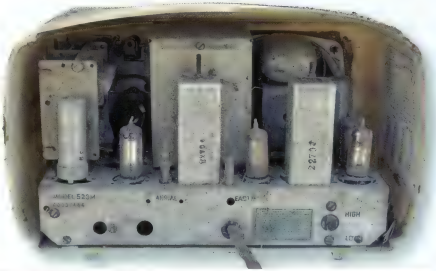

This is the view inside the rear of the cabinet prior to restoration. Unfortunately, mice had made a home in the set and the acid in their urine had etched through the plating on the chassis in quite a few places.

adjustment of the antenna tuned circuit trimmer capacitor then allowed it to pick up stations right across the band, although it still wasn't working all that well.

Suspecting alignment problems, I then tuned to a weak station and adjusted the IF transformer coil slugs. The set's performance improved quite markedly and is now quite good – better than I expected in fact from a set with just four "battery-type" valves. The interference level from the vibrator supply was less than expected, too.

Electronic vibrator

I've always stuck to mechanical vibrators for my receivers and in fact have over 100 vibrators in my collection. Some of these are unused and are in "brand-new" condition, while others are worn out and need servicing.

Over the years, various articles have appeared in radio and general electronics magazines describing how to replace electromechanical vibrators with solid-state versions. However, although these did work, some had a tendency to overheat and most were too bulky to fit inside the housing used for the original mechanical vibrator.

To overcome these problems, Tony Maher of the Historical Radio Society of Australia (HRSA) developed a solid-state MOSFET-based replacement module several years ago. It's designed to take the place of a variety of vibrators and what's more, it fits easily into old vibrator housings.

In fact, Tony has developed two solid-state vibrator versions. If the first version is used, the supply will put out about the same voltage as for a mechanical vibrator. The second V1 version is more efficient and if fitted instead, the supply will have an output that's up to 15% higher than the original.

I decided that it could be an interesting exercise to try one of Tony's electronic vibrators in the old AWA Radiola 523-M receiver. As a result, I purchased two of the V1 modules.

When fitted with its original mechanical vibrator, the 523-M's supply put out around 75V on load. This clearly indicated that the vibrator had seen better days, since the voltage should have been nearly 90V. The current drain of the supply by itself (ie, when tested out of the set) was around 0.6A at 75V output and a 12mA load.

When I substituted one of Tony's V1 (second version) modules, the results were excellent. The output voltage was now around 107V with a 17mA load, while the current drawn from the 4V supply was about the same as it was for the electromechanical vibrator (which produced just 75V). So the electronic version is definitely much more efficient.

In fact, my measurements showed that the supply has an efficiency of 75% when using the Mosfet solid-state module. This drops to just 40% when using the rather tired mechanical vibrator. A new mechanical vibrator should result in better than 50% efficiency.

I also checked the interference produced by both vibrators and found

Silicon Chip Binders

REAL VALUE AT $16.95* PLUS P&P

Are your copies of Silicon Chip getting damaged or dog-eared just lying around in a cupboard or on a shelf? Can you quickly find a particular issue that you need to refer to?

Keep your copies safe, secure and always available with these handy binders

These binders will protect your copies of Silicon Chip. They feature heavy-board covers, hold 12 issues & will look great on your bookshelf.

- 80mm internal width
- Silicon Chip logo printed in gold-coloured lettering on spine & cover

Silicon Chip Publications
PO Box 139
Collaroy Beach 2097

Order online from www.siliconchip.com.au/Shop/4 or call (02) 9939 3295 and quote your credit card number. *See website for overseas prices.

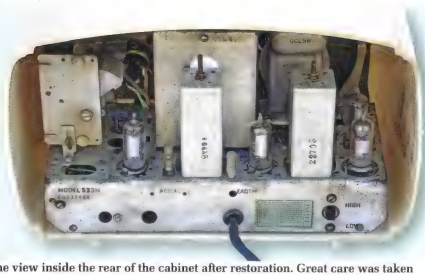

The view inside the rear of the cabinet after restoration. Great care was taken during cleaning to avoid damaging the label stuck to the inside of the cabinet and the ARTS&P label on the back of the chassis.

that the electronic version produces considerably less than the mechanical version. Added to that, the electronic version is acoustically silent. These initial tests, by the way, were all done with the supply outside the receiver. However, I was confident that the set would be reasonably free of RF noise with either version fitted to the set and that I could then minimise any residual interference once the set was fully operational.

Note that the electronic vibrators can be wired to replace mechanical 4V, 6V & 12V synchronous, non-synchronous and split reed vibrators. In fact, they can be used in any sets in this voltage range with no alteration at all. In addition, by replacing the Mosfets with higher rated types, it's possible to use them in 24V and 32V domestic radio sets.

Both 6V and 12V car radios can be powered by these modules without the use of a heatsink. Note, however, that the electronic vibrators are designed for negative earth, so some vibrators in positive earth vehicles cannot be replaced by electronic versions without making suitable modifications.

By making other modifications, they could also possibly be used in place of the large mechanical vibrators fitted in the 32V DC-to-230VAC inverters that were used to power TV receivers in remote rural areas. In this application, because of the large power output required, it would be necessary to fit the Mosfets to a heatsink and to adjust the frequency of oscillation. In short, this is quite a versatile module.

In-circuit comparisons

With the mechanical vibrator in circuit, the HT was again 75V and the set drew about 1A (more than the printed specifications). I then substituted the electronic vibrator and installed a 1kΩ resistor in series with the HT rail to reduce the HT rail to 90V. This time, the current drain from the 4V source was 0.75A which is noticeably less than for the mechanical vibrator.

In the end though, I decided to leave the old mechanical vibrator in the receiver. It still does the job, even if not as well as it did when new, and it maintains the set's originality.

However, I was very pleased with the performance of the electronic vibrator and can confidently recommend its use. They are available from Tony as a kit and I'll probably convert some of my vintage radio transmitters over to this module. The noise suppression in some mechanical vibrator sets was not very good and Tony's first design using a 4047 IC generates very little noise, so it can overcome such problems. Tony can be contacted by email at tmaher@detection.com.au

Summary

The AWA Radiola 523-M is quite an interesting little set. It works well when powered from 4V, although why AWA chose to use this unusual supply voltage is a bit of a mystery, especially when virtually every other manufacturer in the late 1940s used 6V. I suspect that the reason is due to the earlier use of 2V filament valves, with one 2V cell of a 6V battery being used to power the filaments and the remaining 4V from the other two cells being used for the vibrator supply.

In operation, the current consumption was balanced between the three cells. The battery, of course, could be switched in and out of the car for charging if the farm was in a remote area.

Quite frankly, I had expected a lot more interference from the vibrator supply, so I was pleasantly surprised on that front. Other brands filtered the input and output supply rails more thoroughly than in this set and there was no need for a shielded supply cable to minimise interference.

Physically, the circuit could have been built onto a larger chassis, as there is quite a lot of room between the front of the chassis and the cabinet. This would have made the set easier to service, although it's still relatively straightforward.

One thing I don't understand is why the dial lamp was permanently left in circuit. Almost all vibrator sets had dial lights that were controlled by a pushbutton switch, so that they could be turned on only when tuning the set. This was done to minimise current drain and prolong battery life. Removing the battery when it went flat and taking it to a local garage for charging was a real chore, so the longer the radio worked between recharges the better.

This set was obviously designed for the cheaper end of the market and it did a good job there. However, it does need a good outdoor antenna and earth to give reasonable performance. It is a set well worth having in a collection particularly if, like me, you like battery valve radios. SC

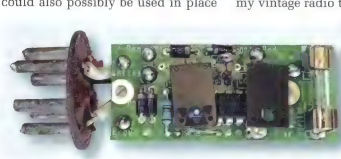

This electronic vibrator is small enough to fit inside the case of a mechanical vibrator.

ASK SILICON CHIP

Got a technical problem? Can't understand a piece of jargon or some technical principle? Drop us a line and we'll answer your question. Send your email to silicon@siliconchip.com.au

12V DC supply for telescope controller

I have a reflector telescope whose "go-to" feature is driven by 12V DC. The scope itself has a battery box that holds 8 x 1.5V AA batteries which need constant and regular replacement. To overcome the problem I purchased two battery holders, each holding 10 NiMH batteries, from Jaycar. One set of batteries is in use while the other set is on standby or being charged.

To recharge the NiMH cells, I have to remove them and place them into suitable battery chargers, each holding four cells at a time. I have two small sealed lead-acid battery chargers that Oatley Electronics listed as K215 Intelligent Battery Charger. Would this charger be OK to charge my 12V bank of AA NiMH batteries? If not, could you suggest a suitable 12V charger? (K. J., via email).

● A sealed lead-acid battery charger is not suitable for use with NiMH batteries; their cell chemistries are very different. We have not tested it, but Jaycar sell a charger for up to 10AA NiMH cells – see Jaycar Cat. MB3551.

BAF wadding for loudspeaker enclosures

I am building a sealed loudspeaker enclosure. The design specified Innerbond as a filling. Do you know where it is available? (W. W., via email).

● Innerbond is bonded acetate fibre (BAF). You should be able to buy it or an equivalent from Jaycar (Cat. AX3694).

Cable connection for GPS receiver

I have a question or two on the Nixie Clock Mk.2 (SILICON CHIP, February & March 2015). To maintain greater time accuracy I assume that the GPS receiver should have a permanent view of the sky for satellite time syncing, rather than placing it near a window to see a satellite or two initially.

In my situation, the building has metal roof and walls. This suggests that satellite signal reception may be poor. Is it possible to locate the GPS remotely from the clock, using a data cable to connector 7 and 3? Can the display be set up to show UTC/GMT time rather than local time? (A. H., Evatt, ACT).

● It is possible to have the GPS module connected via a data cable however we would be inclined to first build the clock as intended.

You may find that it performs quite well in that form. The article gives information on how to display UTC/GMT time.

Tiny Tim amplifier at risk of damage

I obtained two PCBs from your Online Shop recently. One was for the HiFi Headphone Amplifier (SILICON CHIP, September & October 2011) and this is built and seems to work perfectly. In fact, it seems better than that in my Studio Preamplifier built some time ago and is definitely better than the preamplifier in my Roksan Kandy K2.

The second PCB has been used to construct the "Tiny Tim" Stereo Amplifier (SILICON CHIP, October & December 2013, January 2014). However, I have not included the internal DAC element. All seemed OK until the test-

Problems With Shortwave Reception

I have been trying to obtain decent shortwave reception in suburban Adelaide without much success. I built a TenTec 1254 receiver which works OK and following the suggestions in the TenTec manual, I erected a long-wire antenna.

Because of the limitations of my suburban address, this long-wire antenna is about 30 feet long and about 12 feet up from the ground. The feeder coax is earthed to a copper household water pipe which goes into the ground.

Reception of broadcast band signals on this antenna is good and I have had Russian signals on 21.9MHz but very little else and no shortwave, ie, no amateur transmissions at all.

The suppliers of the radio suggested I would do better with an active antenna. I built one but it does very little better than the long wire antenna.

So would the discone antenna from Icom be any better? Would you expect the active antenna to perform better than the long wire? Would it be practical to feed the long wire antenna through the active antenna amplifier to increase the gain?

Are there other RF amplifiers which might help my problem? Can you suggest any other means of improving the reception? Any help you can offer will be gratefully received. (B. D., via email).

● The problem with your long wire antenna is that it is not very "long" at shortwave frequencies. It needs to be much longer. It will also be quite directional so you will miss out on signals coming from other directions.

Possibly the best reception would be from a discone as it is non-directional but the Icom one is too small to give good reception in the shortwave bands. Possibly the best approach would be to use the rotatable active frame antenna described on pages 32 & 33 of the June 2013 issue of SILICON CHIP. This suits the bands you are interested in.

By the way, you will probably find there is not much amateur band activity unless you listen at particular times. Possibly, you should try and contact a local amateur operator to find the best time to listen.

Software Defined Radio Set-up Problems

I am a pretty experienced computer user (since the "Dream 6800" in 1980) and an "old timer" radio amateur but I have had few such frustrating experiences lately as with the recent software-defined radio articles in 2013.

After realising that my old HDTV dongle (which worked under both XP and Windows 7 HP 64 bit) wasn't suitable, I ordered one of the EZCAP DVB-TFM dongles mentioned in the article. This arrived soon after and I subsequently spent several hours using both articles and the suggestions in the letter from Steve Quigg in the June 2013 issue with no success at all.

There appear to be several missing bits of information in the articles. Notably, exactly when to plug in the dongle during software installation and whether the SDR# and Zadig programs are installed in the usual Windows program area. That is, of course, where I put them after unzipping.

I did use 7-zip for Zadig, though the letter is NOT specific about this when the whole package is downloaded from www.rtlsdr.org

My first effort to use the June 2013 suggestions appeared to download OK but after deciding to clean up the installation and deleting the files for reloading, further attempts to reload using sdr.bat result in a quickly flashed error message on about the second file.

Now I have carefully been through things three or four times and the result is always the same.

For your information, the address given for the software in Mr Quigg's letter is slightly wrong. It is actually www.rtlsdr.org/softwarewindows

Am I missing something that should be obvious? This is REALLY annoying! (C. W., via email).

● We are not sure why you believe the May article lacks information regarding exactly when to plug in your dongle during the software installation, because in the third column of text on page 14, it states that after downloading Zadig, extracting it using 7-Zip and then installing it, you "Next, plug your DVB-T dongle into the USB 2.0 port you intend to use for the SDR. Windows will then go through its usual rigmarole . . ."

Then in the next paragraph, it states, "Now start up Zadig in the usual way . . ."

So the procedure is first to install Zadig, then plug in the dongle and follow this by running Zadig to install the correct RTL driver.

Yes, it's quite OK to install both Zadig and SDR# in the usual Windows program area, ie, in *C:\Program Files\Zadig* and *C:\Program Files\SDR#* respectively. You'll need to create these folders first, of course.

We agree that installing this SDR software is rather tricky and problematic but we made every effort to make the May article as clear and as helpful as possible.

ing began. Also the power supply has been set up as a separate unit, keeping the amplifier itself as a low-voltage unit as with the Headphone Amplifier and dimensionally the same.

On testing, I found that the ±20V output one should obtain was ±25V. Putting the protective resistors (in my case, 100Ω 7W as 5W was not available locally) in the output to the amplifier reduced this to ±15V ±1.5V. After feeding this into the amplifier and setting up the quiescent currents, the listening experience on headphones was very good.

So considering the difference of a supply of ±20V to ±25V was not massive and since during testing I had measured ±21.5V, I proceeded to take out the 100Ω protective resistors. Listening to headphones, everything sounded fine. I then shut down and connected loudspeakers. It all sounded fine and the output transistors did not feel hot. About five minutes after this, there was a significant "crack/explosion".

The problem was that one of the 220µF 50V capacitors had exploded. It was amazing how far the bits went. To me it appears that increasing the voltage value to 50V over the headphone amplifier value was not sufficient to cope with the the ±25V supply.

I will go to the local Maplins store and get some 63V 220µF 10mm diameter capacitors which I know can be fitted.

Perhaps I should give a little bit more detail, if relevant. The circuit diagram indicates an AC supply voltage of 230V. For some reason I live in an area where the mains supply is in excess of 245V (last measured 247-248V). Hope you can give some guidance. (T. D., via email).

● You are taking a big risk in operating this amplifier with 25V supply rails. This represents an increase in heat dissipation in the regulators and output transistors of more than 50%. At some stage, you will want to turn up the wick on the amplifier and that is likely to cause catastrophic failure of the output transistors and could even damage your loudspeakers.

Note that simply increasing the voltage rating of the 220µF capacitors will not necessarily prevent another failure of these since that particular failure was more likely due to the excessive ripple current. Increasing the voltage rating will probably not increase the ripple rating; for that you need a physically larger capacitor.

Simply put, you need to reduce the supply voltage. Either go for a 12V + 12V transformer or reduce the mains supply voltage with an auto-transformer. Have a look at our Mains Moderator project from the March 2011 issue.

You can see a 2-page preview at www.siliconchip.com.au/Issue/2011/March/Mains+Moderator%3A+Stepping+Down+The+Volts

Microscope for PCB assembly

Where can you get a good optical microscope for surface-mount prototype boards? Most hobbyists do not have pick-and-place machines. (K. J., via email).

● We reviewed a stereo microscope for SMD work in the July 2014 issue. You can see a 2-page preview of the review at http://siliconchip.com.au/Issue/2014/July/Review%3A+AmScope+Stereo+Microscope

Bass & treble controls for Tiny Tim amplifier

I would like to use the Tiny Tim amplifier (SILICON CHIP, October & December 2013, January 2014) with a preamplifier which has tone controls, balance control, line input and

output and a tuner input, as well as the DAC already provided. In short, I want the facilities of a traditional stereo amplifier plus the digital inputs in a low-power high-quality unit.

Do you have a preamp to add? (N. B., Taylors Lakes, Vic).

● It is many years since we did an amplifier with tone controls; in March & April 1995 in fact. If you had a look at that amplifier, you could build the preamplifier which would do exactly what you are asking for. However, unless you can obtain it from RCS Radio (phone 0404 727 727 or 0481 296 922), the preamplifier and switch PCB you need are now unavailable.

We can supply photostat copies of the two relevant articles for $12 each, including postage.

Using a 24V truck fan as a wind generator

Would a 24V fan, eg, from a truck cab fan cooler, deliver a small amount of power to a 12V battery system on a boat, if used as a wind generator? I appreciate that the power delivered would be unregulated and that you would just have to keep an eye on the battery voltage to prevent overcharge. Thanks. (P. B., via email).

● In theory, any permanent magnet DC motor driven by a fan can be used to generate electricity. However, unless you set the fan up in a gale, it is likely to generate only a very small amount of power and certainly a fraction of what the same fan/motor combination requires in order to produce its rated draft output.

Consider that small motor fans do produce quite a draft; equivalent to a high wind across a small cross section (ie, the fan's effective diameter). On that basis, any small bladed-fan will not produce very much power, perhaps a few watts at most.

Headphone amplifier for hearing-impaired

My hearing aids do a reasonable job of improving intelligibility when listening to TV or music via an A/V amp and speakers. However, for private listening via headphones I was wondering if you would consider as a project a small stereo amplifier/equaliser to go between the HP socket and headphones. This would have an individually adjustable or programmed boost response to mirror ones' hearing loss curves as programmed into the aids themselves. (T. S., Tauranga, NZ).

● What do other readers think of this concept?

GPS frequency standard module hard to obtain

I am trying to build the GPS Frequency Standard (March 2007 and later updates) but the Garmin 15xl-w module is proving very hard to get. I can't buy it direct from Garmin; they don't even respond to my emails. Nor can I order it through a regular Garmin stockist such as DSE.

I thought I had found a stock of them with a vendor in the USA that had 15. I ordered two and now I am waiting on back order.

I have been unable to find a substitute as most of the GPS modules now (assuming you are not using any Garmin sentences used in the PIC) are 3.3V logic which would require a little more interfacing to work. (M. W., via email).

● The GPS receiver module should not be a problem because you can use one of the currently available modules which we used for the 1 PPS GPS Timebase units described in the February and April 2013 issues.

The easiest one of these to use would be the GlobalSat EM-406A which is currently available from a number of suppliers. Like the Garmin unit we used originally, the EM-406A operates from a 5V supply whereas most of the other currently available units operate from 3.3V so you'd need to add a 3.3V regulator to power them.

Solar-powered shed/boat alarm

I read your article on the Solar-Powered Shed Alarm (SILICON CHIP, March 2010) and built an Altronics kit version as soon it was available. The problem is that when a PIR detector is connected, the alarm is activated immediately after 40 seconds of exit delay, regardless of whether the detector has detected any movements or not. It looks like it has been short-circuited or something similar.

Having previously finished a dozen or so similar kits, I inspected the board and soldering in detail but could not find any faults. So I bought another PIR detector from Altronics. However, the problem is still the same; the alarm is somehow always triggered.

When I disconnect the PIR detector, it is fine; ie, the alarm doesn't sound. There are no problems with the other

Driving Wireless Headphones From Rear Channel Signals

I have a pair of Philips SBC-HC8445 wireless headphones which I have been using for quite awhile without any problems. However, I have just upgraded my amplifier to a Yamaha HTR-3066 and I want to be able to plug the headphones into the rear audio inputs of the amplifier, rather than using the headphone socket on the front.

The reason for this is that I have designed a switch box that controls all of my inputs and outputs and mains connectors via a Logitech IR universal remote.

I have plugged the headphones into various audio inputs but cannot hear anything when I switch to that input. Do I need another amplifier between the amplifier and the headphones? If so then what would you recommend? (M. F., via email).

● We think that there might be some confusion here. You cannot plug your headphones into any inputs; you must plug them into amplifier outputs. If you have line level output signals available for the rear channels, you can feed them to a headphone amplifier which can then drive your headphones.

If you want a high-quality headphone amplifier, have a look at our design in the September & October 2011 issues. You can see 2-page previews of the articles at: www.siliconchip.com.au/Issue/2011/September/High-Performance+Stereo+Headphone+Amplifier%2C+Pt.1 and www.siliconchip.com.au/Issue/2011/October/High-Performance+Stereo+Headphone+Amplifier%2C+Pt.2

Valve Power Supply Filter Choke

I am restoring a Hallicrafters SX-25 receiver which is missing a power supply choke. The choke fits in a location which is quite small and all the chokes I have are large and would result in shorting the rectifier valve pins to ground. There are a number of commercially available step-down transformers that will fit in the location and I am considering rewinding one to act as a choke.

However, there is a constant DC current component flowing through chokes used in power supplies, which may affect operation when using a power transformer frame. Also, I don't know if there are physical differences in the way a transformer is assembled when compared to a choke. Is there a physical difference in the laminate material for each type and are they assembled in the same way, eg, with alternating up and down laminations?

Experimenting with the number of turns is not a problem, as I have an inductance meter to measure the large inductance (several Henrys) required. Can you advise the differences between the two types and likely problems that I may face? (R. S., Burrill Lake, NSW).

● Most transformers and chokes which are designed to carry DC current in their windings are assembled with an air-gap between the E and I laminations. This gap is usually quite small, maybe half a millimetre, and is there to prevent magnetic saturation of the core.

If you cannot replace the choke, you could try replacing it with a resistor instead. It will not be as effective for hum filtering but might be good enough.

To do this, you need to know how much voltage was dropped across the choke and the amount of current. Then you can select a resistor to give the same voltage drop and calculate the required wattage rating. Typically, you would need a 10W resistor and it might have a value of 47Ω but that is just a guess.

two magnetic detectors for the doors; they work fine. What could be the problem? (Z. Z., via email).

● Check the PIR output voltage at pin 2 of CON1 with the unit operating. It should be low (near 0V) when the PIR is not triggered and high (around 4.5V) when it is.

If this is correct but the alarm is still triggering incorrectly, it's possible the threshold voltage of your Mosfet Q1 is unusually low. In this case, try changing the 10MΩ pull-down resistor to a lower value such as 1MΩ.

If it still won't work, you could try adding a resistor in series with the PIR trigger wire (ie, to pin 2 of CON1); say around 470kΩ. This will increase the voltage required from the PIR output before the alarm is triggered by about 50%.

New TV antennas for Australia?

The article "The TV Channel Restack & What It Means To Viewers" in the November 2014 issue seems to be a furphy. We live in Brisbane and we are enjoying TV reception from our old analog antenna which must be 20 years old.

We haven't had to retune the TV either. (M. M., via email).

● Many older antennas may continue to work OK with digital transmissions, especially in strong signal areas. But if you need to purchase a new antenna, naturally you should choose one to suit your area.

However, if you haven't retuned your digital TV or set-top box within the last 12 months, there is a strong chance you could be missing out on some new channels. There again, if you retune and don't get any new channels, it's possible that they are not being picked up by your old antenna. In that case, you would need to compare your list of received channels with those of your close neighbours (with digital antennas) to see if you are missing any.

GPS 1pps timebase has no NMEA output

I have just built the Deluxe GPS 1pps Timebase project (SILICON CHIP, April 2013) and am not getting the NMEA output on the DB9F connector.

It appears to me that the output voltage of the EM-406A module is not enough to drive the input to the 40106 Schmitt trigger. I have verified that the NMEA stream is appearing on pin 5 and I have tested the 40106 in-circuit (with the GPS module removed) and the inverter works correctly.

Have others had this problem? One possible answer (if I am correct with the problem) would be to replace the 40106 with a 74HCT14. (P. G., via email).

● We have not heard of anyone else experiencing this particular problem and we didn't find it with the couple of EM-406A modules we have used in the 1 PPS prototypes built to date. However, it may well be that some of the modules do have an output from the Tx pin that's low enough to prevent proper triggering of the 40106.

All we can suggest is that you try replacing the 40106 with a 74HC14 or 74HCT14, as you proposed. The 74HC14 is pin-for-pin compatible and according to the data sheet it does have lower input thresholds – so it should be well worth a try.

Using the Mini-D as a guitar amplifier

What would you advise on the following? If the Mini-D (SILICON CHIP, September 2014) is used as a guitar amplifier, will a preamp be required? How much battery life can be expected when running it off a 9V battery with a small speaker? (J. E., via email).

● We think the input impedance of the Mini-D is too low for direct connection to a guitar and it probably does not have enough gain. A guitar preamplifier would therefore be required. A microphone preamplifier would work, as long as it has a sufficiently high input impedance (many would).

Battery life depends on speaker efficiency. Small speakers are not be very efficient. Use the largest speaker that you can. At low volume levels, we would expect around eight hours usage (40mA quiescent current, ~350mAh battery capacity). With 1W output (which might be reasonably loud), it would be more like 2-3 hours.

Ultrasonic anti-fouling for boats

I purchased six Ultrasonic Anti-Fouling kits (SILICON CHIP, September & October 2010) from Jaycar for my boats and I am in the process of in-

MARKET CENTRE

Cash in your surplus gear. Advertise it here in SILICON CHIP

FOR SALE

MOVING SALE: bargains galore on our new website. We have to reduce our stock. Audio & video equipment, cables, components, mag's, books, etc. www.questronix.com.au

PCB MANUFACTURE: single to multi-layer. Bare board tested. One-offs to any quantity. 48 hour service. Artwork design. Excellent prices. Check out our specials: www.ldelectronics.com.au

tronixlabs.com - Australia's best value for hobbyist and enthusiast electronics from adafruit, DFRobot, Freetronics, Raspberry Pi, Seeedstudio and more, with same-day shipping.

PCBs MADE, ONE OR MANY. Any format, hobbyists welcome. Sesame Electronics Phone 0434 781 191. sesame@sesame.com.au www.sesame.com.au

LEDs: BRAND NAME and generic LEDs. Heatsinks, fans, LED drivers, power supplies, LED ribbon, kits, components, hardware, tritium markers. We can order almost anything in! www.ledsales.com.au

VALVES (approx. 200): nearly all NOS triodes, suitable for audio and/or radio. Sell for half market value. List on request. robertd052@gmail.com

WORLDWIDE ELECTRONIC COMPONENTS
After 30 years am closing down, so massive price reductions to clear stock. 1/4 Watt Resistors $0.55 per 100; 0.6W 1% Metal Film Resistors $1.10 per 100; Batteries & PCB Products – Perth Metro or Pick Up Only. All other items 50% off Catalogue Price. Minimum Purchase $11.00 + Freight.
www.iinet.net.au/~worcom

PCBs & Micros: SILICON CHIP can supply PCBs and programmed microcontrollers for recent projects and some not so recent projects: www.siliconchip.com.au or phone (02) 9939 3295.

KIT ASSEMBLY & REPAIR

DAVE THOMPSON (the Serviceman from SILICON CHIP) is available to help you with kit assembly, project troubleshooting, general electronics and custom design work. No job too small. Based in Christchurch, NZ but service available Australia/NZ wide. Phone NZ (+64 3) 366 6588 or email dave@davethompson.co.nz

KEITH RIPPON KIT ASSEMBLY & REPAIR:
* Australia & New Zealand;
* Small production runs.

Phone Keith 0409 662 794. keith.rippon@gmail.com

VINTAGE RADIO REPAIRS: electrical mechanical fitter with 36 years experience and extensive knowledge of valve and transistor radios. Professional and reliable repairs. All workmanship guaranteed. $10 inspection fee plus charges for parts and labour as required. Labour fees $35 p/h. Pensioner discounts available on application. Contact Alan on 0425 122 415 or email bigal radioshack@gmail.com

ADVERTISING IN MARKET CENTRE

Classified Ad Rates: $32.00 for up to 20 words plus 95 cents for each additional word. Display ads in Market Centre (minimum 2cm deep, maximum 10cm deep): $82.50 per column centimetre per insertion. All prices include GST.
Closing date: 5 weeks prior to month of sale. To book, email the text to silicon@siliconchip.com.au and include your name, address & credit card details, or phone Glyn (02) 9939 3295 or 0431 792 293.

stalling them. The Jaycar kits have pre-assembled transformers and transducers.

As instructed I adjusted the voltage to 5V prior to installing the fuse and IC2. Then when I apply power, the fuse blows. I've made all the usual checks regarding soldering and shorts and it all looks OK. That said, one of the units does appear to work, ie, the power LED is on but I don't hear any pulses over AM radio. Do you have any ideas please? (S. C., via email).

- If the transducer is placed on a flat hard surface, it tends to move when the frequency reaches resonance. That will give some indication that the transducer is being driven by the working unit. Do not touch the transducer terminals during this test, other-

continued page 104

Notes & Errata

Spark Energy Meter, February & March 2015: the main circuit diagram shows D13 as a BAT46; this should be a 1N4004 silicon diode. The parts list should therefore be adjusted: 9 BAT46 diodes (not 10) and a 1N4004 added as D13.

On the main component overlay (March), ZD31 is shown as 16V whereas it should be a 12V zener to agree with the circuit diagram and the parts list. On the Calibrator, if there is insufficient range adjustment for VR2 to set 250Hz, R1 can be changed to a lower (eg, 180kΩ) or higher (eg, 270kΩ) value, as required.

CLASSiC DAC (February-May 2013): Fig.11 on page 39 of the April 2013 issue showed a 10Ω resistor to the left of Q11 which should be 2.2Ω. Also, the capacitors immediately below Q11 should be 220µF and 1µF. These are all shown correctly on the circuit diagram. The overlay diagram in the online edition is also correct.

Ask SILICON CHIP

. . . continued from page 103

wise you will get a nasty electric shock.

If you are sure the construction is correct, then you can try using a 3A slow-blow fuse or 5A standard fuse instead of the 3A fuse. The initial surge current when power is applied can cause a fuse to blow.

Hot snubber in speed controller

I have built the Full-Wave Motor Speed controller from the May 2009 issue and 470Ω 1W resistor in series with the 47nF capacitor across the IGBT gets very hot. All voltages appear normal. Can you explain or suggest any reason? (D. M., via email).

● The resistor dissipates power as it charges and discharges the 47nF capacitor in the snubber network and so it runs hot. This is normal.

You can change this resistor to a 5W type or use a smaller value capacitor such as 22nF 250VAC (X2 rated), if you are concerned about the resistor temperature.

Ultrasonic transducer is unlikely to be faulty

I have just completed building the Ultrasonic Anti-Fouling kit and on switching the unit on it blows fuse F1. Disconnecting and checking the transducer with an ohm meter, I get no reading across the red and black wires.

Have I been sent a faulty transducer? What is my recourse in this situation? (R. G., via email).

● The ultrasonic transducer should read as an open-circuit when using a multimeter, as this is a piezo electric transducer that is essentially a capacitor when DC voltage is applied. So it is unlikely that the transducer is faulty.

There can be several reasons why the fuse blows. Firstly, with the fuse and IC out of circuit, trimpot VR1 should be adjusted so there is 5V between TP0 and TP1.

If this is not able to be adjusted correctly, check components for correct orientation and position. Make sure the wire link (Link 1) is in place or alternatively a 0Ω resistor in the Link 1 position. Check for solder bridges that shouldn't be there and unsoldered joints.

Before inserting the fuse and IC2, check that the 2200µF electrolytic capacitor is orientated correctly (plus side toward the fuse). SC

Advertising Index

Altronics	loose insert
Emona Instruments	7
Hare & Forbes	OBC
Icom Australia	41
Jaycar	IFC,49-56
KCS Trade Pty Ltd	25
Keith Rippon	103
LD Electronics	103
LEDsales	103
Master Instruments	103
Mastercut Technologies	9
Microchip Technology	3
Mikroelektronika	IBC
National Instruments	9
Ocean Controls	8
Qualieco	59
Questronix	103
Radio, TV & Hobbies DVD	91
Sesame Electronics	103
Shapely Design	5
Silicon Chip Binders	76,97
Silicon Chip Online Shop	37
Silicon Chip Subscriptions	77
Silvertone Electronics	10
Tronixlabs	103
Wiltronics	11
Worldwide Elect. Components	103
X-ON Electronic Services	103

WARNING!

SILICON CHIP magazine regularly describes projects which employ a mains power supply or produce high voltage. All such projects should be considered dangerous or even lethal if not used safely.

Readers are warned that high voltage wiring should be carried out according to the instructions in the articles. When working on these projects use extreme care to ensure that you do not accidentally come into contact with mains AC voltages or high voltage DC. If you are not confident about working with projects employing mains voltages or other high voltages, you are advised not to attempt work on them. Silicon Chip Publications Pty Ltd disclaims any liability for damages should anyone be killed or injured while working on a project or circuit described in any issue of SILICON CHIP magazine.

Devices or circuits described in SILICON CHIP may be covered by patents. SILICON CHIP disclaims any liability for the infringement of such patents by the manufacturing or selling of any such equipment. SILICON CHIP also disclaims any liability for projects which are used in such a way as to infringe relevant government regulations and by-laws.

Advertisers are warned that they are responsible for the content of all advertisements and that they must conform to the Competition & Consumer Act 2010 or as subsequently amended and to any governmental regulations which are applicable.

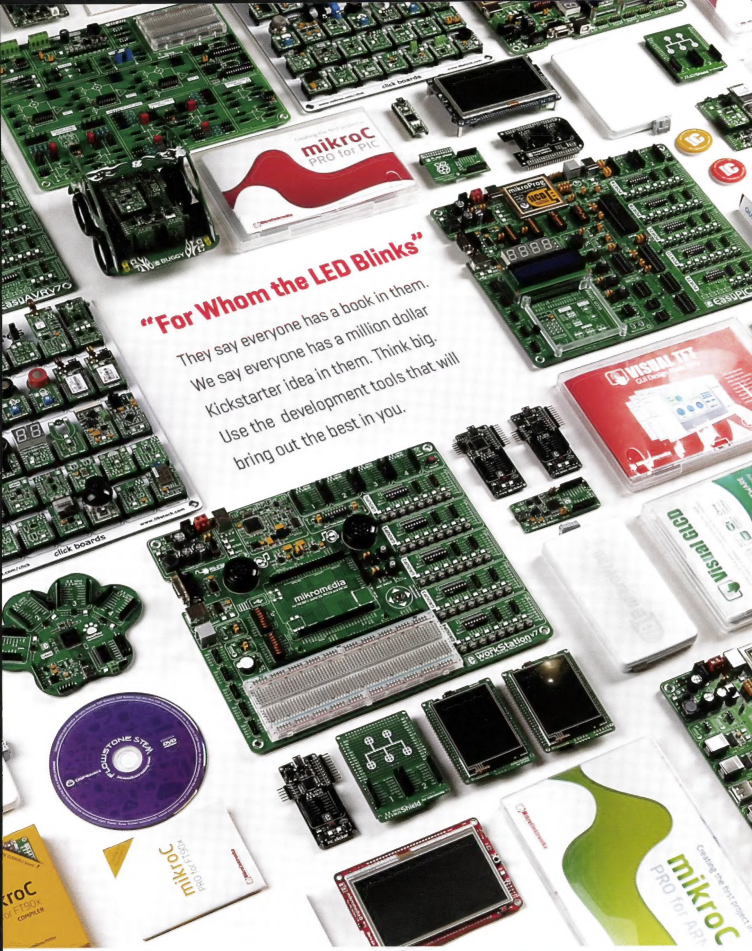
"For Whom the LED Blinks"
They say everyone has a book in them.
We say everyone has a million dollar
Kickstarter idea in them. Think big.
Use the development tools that will
bring out the best in you.
SHOP NOW
www.mikroe.com/store
MikroElektronika
DEVELOPMENT TOOLS | COMPILERS | BOOKS

OPTIMUM®

THE NEXT GENERATION IN MODEL ENGINEERING

TU-2506V-16M LATHE & MILL DRILL COMBINATION

The OPTI-lathe and mill combination machines have more features required to produce challenging projects.

The lathe features electronic variable spindle speed, digital readout spindle speed, inductively hardened and ground bed, metric and imperial thread cutting, auto feed, 0.009mm spindle accuracy and more.

It has a turning capacity of 250 x 500mm, 26mm spindle bore, 125mm 3 jaw chuck, 4MT head stock taper, 2MT tailstock taper and 1.6hp 240V motor.

The mill features electronic variable spindle speed, digital readout spindle speed, 2 speed gearbox, 3MT spindle taper, tilting head and 0.66hp 240V motor.

Options available are 3 axis digital readout system for superior accuracy in machining.

Package price includes TU-2506V Lathe + BF-16AV Mill Head + ST-2506V Stand

$2,530 **SAVE $275**

Use promo code OPTILATHE and receive these great offer online or instore! Offers end 27-05-15

TM LATHE TURNING TOOL KIT

- 3 piece
- 12mm size
- 1 x R/H & L/H tool holder
- 1 x right hand boring bar
- 1 pack x 10 Inserts

$264 L450

TM LATHE PARTING TOOL KIT

- 12mm tool centre height
- 1 x 12mm parting block suits 26mm blade height
- 1 x 26 x 2mm parting blade
- 2 x 2mm parting inserts
- 1 x Key insert remover & hex key

$187 L464

TM COLLET & CHUCK SET

- 8 pieces
- Collet range 6 - 20mm
- 3MT chuck taper
- ER32 collet type
- Includes spanner

$253 C922B

HAFCO COOLANT PUMP & TANK

- 9 litre tank
- 20 ltrs/min. 240V pump
- Includes magnetic base nozzle & on/off switch box

$253 P235

HARE&FORBES MACHINERYHOUSE

machineryhouse.com.au

Sydney	**(02) 9890 9111**	**1/2 Windsor Rd, Northmead**
Brisbane	**(07) 3274 4222**	**625 Boundary Rd, Coopers Plains**
Melbourne	**(03) 9212 4422**	**1 Fowler Rd, Dandenong**
Perth	**(08) 9373 9999**	**41-43 Abernethy Rd, Belmont**

Specifications & Prices are subject to change without notification. All prices include GST and valid until 27-05-15